AMATEUR RADIO

NOVEMBER 1964

Vol. 32, No. 11

2/-

Registered at G.P.O. Melbourne, for transmission by post as a periodical

NEW VALVES AT BARGAIN PRICES

1A3	2/6 10 a £1
1A5	5/- 5 a £1
1C7	3/- 7 a £1
1D8	7/6 3 a £1
1F5	10/-
1H5	7/6 3 a £1
1K4	5/- 5 a £1
1K5	5/- 5 a £1
1K7	5/- 5 a £1
1L4	5/- 5 a £1
1L5	10/-
1LN5	(CV781) 5/- 5 a £1
1M5	5/- 5 a £1
1P5	5/- 5 a £1
1Q5	5/- 5 a £1
1R5	16/-
1S2	18/-
1S5	16/-
1T4	10/-
2A5	7/6 3 a £1
2A6	7/6 3 a £1
2C42	15/-
2C46	15/-
2D21	12/-
2X2	5/- 5 a £1
3A4	22/-
3A5	10/-
3S4	10/-
3V4	15/-
5R4GY	20/-
5U4GB	14/6
5V4G	17/6
5Y3GT	13/9
6A6	7/6 3 a £1
6AB7	10/-
6AC7	7/6 3 a £1
6AG5	5/- 5 a £1
6AG7	12/6
6AJ5	7/6 3 a £1
6AK5	15/-
6AL5	14/-
6AM5	15/-
6AM6	(EF91) 10/-
6AS7GT	20/-
6BE6	15/-
6BQ5	17/-
6C4	5/- 5 a £1
6C6	5/- 5 a £1
6C8	10/-
6CM5	25/-
6CW4	25/-
6CW4	socket 5/-
6F8	5/- 5 a £1
6G6G	7/6 3 a £1
6G8G	26/-
6H6	Metal 3/6
6J5GT	10/-
6J6	10/-
6K7	5/- 5 a £1
6K8GT	12/6
6L6GT	15/-
6L7	5/- 5 a £1
6N7	5/- 5 a £1
6R7	7/6 3 a £1
6SC7	7/6 3 a £1
6SF5	7/6 3 a £1
6SF7	7/6 3 a £1
6SH7	4/- 6 a £1
6SJ7	12/6
6SK7GT	20/-
6SL7WGT	12/6
6SN7GT	10/-
6SQ7GT	22/-
6SS7	7/6 3 a £1
6U7	7/6 3 a £1
6U8	17/-
6V4	11/4
6V6GT	16/-
6X4	10/-
6X5	13/-
7A8	2/- 11 a £1
7C5	5/- 5 a £1
7C7	5/- 5 a £1
7E6	3/6 7 a £1
7W7	2/6 10 a £1
12A6	3/- 7 a £1
12AH7	5/- 5 a £1
12AT7	12/-
12AU7	15/-
12AV6	7/6 3 a £1
12BE6	7/6 3 a £1
12C8	5/- 5 a £1
12H6	3/6 7 a £1
12J5	5/- 5 a £1
12SA7GT	10/-
12SC7	5/- 5 a £1
12SK7	5/- 5 a £1
12SQ7	5/- 5 a £1
12SR7	5/- 5 a £1
19	5/- 5 a £1
30	5/- 5 a £1
47	5/- 5 a £1
57	5/- 5 a £1
58	5/- 5 a £1
717A	7/6 3 a £1
725A	20/-
808	10/-
809	20/-
830B	15/-
866	25/-
954	5/- 5 a £1
955	5/- 5 a £1
956	5/- 5 a £1
958A	2/6 10 a £1
1616	20/-
1625	5/- 5 a £1
1626	5/- 5 a £1
1629	5/- 5 a £1
2051	5/- 5 a £1
5763	28/-
6021	10/-
9002	10/-
9004	5/- 5 a £1
AV11	2/11 8 a £1
EA50	2/- 11 a £1
ECC35	20/-
ECH33	20/-
ECH35	7/6
EF39	5/- 5a £1
EF50	(VR91) and socket 3/6
EF70	5/- 5 a £1
EF72	5/- 5 a £1
EF73	5/- 5 a £1
EF86	26/-
EL41	10/-
EY91	5/- 5 a £1
QQE03/12	47/6
QQE04/20	£3½
QQV06/49	97/6
UL41	7/6 3 a £1
VR53	5/- 5 a £1
VR102	5/- 5 a £1
VR103	5/- 5 a £1
VR136	2/- 12 a £1
VR137	2/6 10 a £1
VT78	(6D6) 5/-
VT127	5/- 5 a £1
VT501	7/6 3 a £1

Packing and Postage 5d. per Valve.

METERS

MR1P 0-1 mA., 1¼ in. square face, 1 in. round hole, clear plastic case 32/6

MR2P 1¾ in. square face, 1½ in. round hole, clear plastic case:—

MR2P 50 uA.	47/6	MR2P 15 mA.	35/-
MR2P 500 uA.	37/6	MR2P 50 mA.	35/-
MR2P 1 mA.	35/-	MR2P 100 mA.	35/-
MR2P 5 mA.	35/-	MR2P 250 mA.	35/-
MR2P 10 mA.	35/-	MR2P "VU" Met.	45/-

MR2P "S" Meter 45/- (S Meter reads S1 to S9 plus 10 to 30 db. F.S.: 1 mA.)

HCR62 edgewise "S" Meter £4/10/0

MR52 2¼ in. square face, 2 in. round hole, black bakelite case:—

MR52 100 uA. 63/-

MR52 1 mA. 40/-

MR65 3¼ in. square face, 2½ in. round hole, black bakelite case:—

MR65 1 mA. 47/6

MR65 "VU" Meter £4/2/6

MR3P 3 x 3 in. square face, 2¾ in. round hole, clear plastic case:—

MR3P 1 mA. 47/6

MR3P "VU" Meter £3/17/0

MO65 3¼ in. round face, 2½ in. hole, black bakelite case:—

MO65 1 mA.	35/-	MO65 1 amp.	35/-
MO65 5 mA.	35/-	MO65 20a. AC/DC	35/-
MO65 10 mA.	35/-	MO65 50a. AC/DC	35/-
MO65 20 mA.	35/-	MO65 15 volt DC	35/-
MO65 50 mA.	35/-	MO65 30 volt DC	35/-
MO65 150 mA.	35/-	MO65 50 volt DC	35/-
MO65 250 mA.	35/-	MO65 50 volt AC	37/6
MO65 500 mA.	35/-	MO65 150 v. AC	42/6
		MO65 300 v. AC	42/6

SO45 1¾ in. round face, 1¾ in. round hole, black bakelite case:—

SO45 20 Volt A.C. 35/-

SO45 30 Volt A.C. 35/-

G.E.C. Meters, 3¼ in. round face, 2½ hole, black metal case, 0-50 mA. 25/-

VU METERS

(Scale —29 —0, plus or minus 3 VU, 0-100% (OVU) Frequency range: 30-7500 c/s. Impedance: 3900 plus or minus 200 ohms. Time constant: 0.3 seconds. Time for 99% response.)

MR65 .... £4/2/6 MR3P £3/17/6

MR4P .... £5/0/0 MR2P £2/5/0

Packing and Postage 2/6

SS550 HIGH SENSITIVITY VOLT-OHM-MILLIAMMETER

Ranges—D.C. Volts: 0.5, 2.5, 10, 50, 250, 500, 1000v. A.C. Volts: 2.5, 10, 50, 250, 1000v. D.C. Current: 10 μA., 2.5 mA., 250 mA., 10 amp. Resistance: 20K, 200K, 2M, and 20M ohms. Decibel: Minus 20 db. to plus 62 db.

Price £13/17/6

Packing and Postage 7/6.

MATRIX BOARD

4¾" x 3" (291)	3/3	6" x 4½" (292B)	5/9
6" x 1½" (—)	3/-	6" x 6" (297)	7/6
6" x 2½" (270)	3/6	9" x 4½" (293)	8/6
6" x 3" (296)	4/-	9" x 6" (298)	11/6

NEW TRANSISTORS IN STOCK

OC45	14/-	OC170	17/6
OC71	10/-	OC171	17/6
OC74	11/-	OC45	14/-

Packing and Postage 1/-

VERNIER DIALS

Ratio 8 to 1 reduction, scaled 0-10.

Type T501, 1½" diam. .... 17/6 inc. tax

Type T502, 2" diam. .... 22/- „ „

Type T503, 3" diam. .... 28/- „ „

Packing and Postage 11d.

COPPER WINDING WIRE

4 oz. Reels

16 B & S Enamel	9/6	26 B & S Enamel	9/6
18 B & S Enamel	8/6	28 B & S Enamel	12/6
20 B & S Enamel	9/6	30 B & S Enamel	13/6
22 B & S Enamel	10/-	33 B & S Enamel	15/6
24 B & S Enamel	10/6	39 B & S Enamel	27/-

RESIN-CORE SOLDER

16 GAUGE

Five-Core in 1-lb. Packets:

40/60 .... 18/- 60/40 .... 22/-

or in 7-lb. Reels:

40/60 .... £6/2/6 60/40 .... £7/12/6

also per Yard:

40/60 .... 8d. 60/40 .... 9d.

NEW SPEAKERS

20C—2 inch, 15 ohms	35/-
2C—2 inch, 15 ohms	35/-
3C—3 inch, 3.5/15 ohms	35/-
4C—4 inch, 3.5/15 ohms	35/-
5C—5 inch, 3.5/15 ohms	35/-
55-4C—5 x 4 inch, 3.5/15 ohms	39/-
6H—6 inch, 3.5/15 ohms	47/6
75H—7 x 5 inch, 3.5/15 ohms	47/6
8H—8 inch, 3.5/15 ohms	57/6
8MX—8 inch, 15 ohms	82/6
96H—9 x 6 inch, 3.5/15 ohms	57/6
12M—12 inch, 2/15 ohms	87/6
12MX—12 inch, 15 ohms	£5/7/6

Packing and Postage 2/-

CO-AXIAL CABLE

50 ohm, UR67, 3/8" diam., in 25 yd. Rolls **25/-**; or 1/6 yard.

72 ohm UR70, 3/16" diam., in 27 yd. Rolls **30/-**; or 1/6 yard.

72 ohm, 3/16", 35 feet **10/-**.

Packing and Postage 7/6

SAKURA CIRCUIT TESTER

Model TR65

Sensitivity: d.c. 20,000 ohms/volt, a.c. 10,000 ohms/volt. Ranges, d.c. volts: 6, 30, 120, 600, 1,200; a.c. volts: 6, 30, 120, 600, 1,200. D.c. current, 60 μA., 6 mA., 60 mA., 600 mA. Resistance: 10K, 100K, 1M, 10M ohms. Capacitance 0.001-0.2 μF., 0.0001-0.01 μF. Inductance: 30-3,000H. Decibels: minus 20 to plus 17 db. (0 db.—0.775v.—600 ohms). Dimensions: 4⅛ x 6¼ x 2⅜ in. Weight 1.3 lbs.

Price £9/5/-

SILICON RECTIFIERS

OA210/1N1763 500 p.i.v. 500 mA. **7/6**

OA211/AR800 800 p.i.v. 500 mA. **19/6**

Packing and Postage 1/-

CRYSTAL DIODES

1N21 Mixer U.H.F. Freq. 3060 .... **7/6**

1N23A Mixer U.H.F. 9375 Mc. **7/6**

or **3 for £1.** Packing and Postage 1/-

GERMANIUM DIODES

OA79, OA91, 1N34A .... **4/6 each**

Packing and Postage 1/-

SLUG-TUNED FORMERS

3/16 inch diameter .... **1/6 each**

HOZAN CHASSIS PUNCH SET

Sizes: 16, 18, 20, 25, and 30 mm.

Price £3/7/6 set Packing and Postage 2/6

122 AERIAL SETS

30 feet high. ten 3-ft. rods, ¾ inch diam. guy ropes and pegs, etc. **£3**, for rail.

LOG BOOKS 6/6 each, postage 1/-

HAM RADIO SUPPLIERS

5A MELVILLE STREET, HAWTHORN, VICTORIA Phone 86-6465

North Balwyn tram passes corner. **Money Orders and Postal Notes payable North Hawthorn P.O.**

We sell and recommend Leader Test Equipment, Pioneer Stereo Equipment and Speakers, Hitachi Radio Valves and Transistor Radios, Kew Brand Meters, A. & R. Transformers and Transistor Power Supplies, Ducon Condensers, Welwyn Resistors, etc.

"AMATEUR RADIO"

JOURNAL OF THE WIRELESS INSTITUTE OF AUSTRALIA. FOUNDED 1910.

NOVEMBER 1964
Vol. 32, No. 11

Editor:
K. M. COCKING VK3ZFQ

Publications Committee:
G. W. Baty (Secretary) VK3AOM
A. W. Chandler (Circulation) VK3LC
S. T. Clark VK3ASC
E. C. Manifold VK3EM
K. E. Pincott VK3AFJ
W. E. J. Roper VK3ARZ

Advertising Enquiries:
C/o. P.O. Box 36, East Melbourne, C.2, Vic.
or
Mrs. BELLAIRS, Phone 41-3535. 478 Victoria Parade, East Melbourne, C.2, Victoria. Hours 10 a.m. to 3 p.m. only.

Publishers:
VICTORIAN DIVISION W.I.A.,
Reg. Office: 65a Franklin St., Melbourne, Vic.

Printers:
"RICHMOND CHRONICLE," Phone 42-2419. Shakespeare St., Richmond, E.1, Vic.

★

All matters pertaining to "A.R.," other than subscriptions, should be addressed to:

THE EDITOR,
"AMATEUR RADIO,"
P.O. BOX 36,
EAST MELBOURNE, C.2, VIC.

Acknowledgments will be sent following the Committee meeting on the second Monday of each month. All Sub-Editors should forward their articles to reach "A.R." before the 8th of each month. Any item received after the Committee meeting will be held over until the next month. Publication of any item is dependent upon space availability, but in general about two months may elapse before a technical article is published after consideration by the Publications Committee.

★

Members of the W.I.A. should refer all enquiries regarding delivery of "A.R." direct to their Divisional Secretary and not to "A.R." direct. Non members of the W.I.A. should write to the Victorian Division, C/o. P.O. Box 36, East Melbourne. Two months' notice is required before a change of mailing address can be effected. Readers should note that any change in the address of their transmitting station must, by P.M.G. regulation, be notified to the P.M.G. in the State of residence, in addition "A.R." should also be notified. A convenient form is provided in the "Call Book".

★

Direct subscription rate is 24/- a year, post paid, in advance. Issued monthly on the first of the month, January edition excepted.

★

OUR COVER

Our interested viewers appear puzzled as to the means by which so much is packed into so little. The unit is one of the Collins Line which, along with many other similar types, has done much to make popular the transceiver type of equipment.

FEDERAL COMMENT

★

THE AMATEURS' ROLE IN CIVIL DEFENCE

Before World War II. the Amateur provided the backstay when emergency communications were required. After the war, the Amateur was instrumental in aiding the establishment and training of communication groups in a number of volunteer organisations.

As these organisations progressed and State Instrumentalities set up and expanded their own communications services, the Amateur's role appeared to become less important; however, when the Civil Defence School was established at Mount Macedon, Victoria, investigations by communications study groups soon revealed that the Amateur still had a very important role to play in the early stages of any emergency.

Many Amateurs have passed through the School as representatives of either the W.I.A. or organisations employing them. The importance of this training to the community is inestimable.

The recognition the Government has accorded W.I.A. representatives in this important work is both gratifying and significant.

Each State Premier's Office is allotted a quota for each study group or course. The W.I.A. has always been invited to nominate members for inclusion in the contingent. These study groups embrace every aspect of civil emergency work, and thus representatives of every section of the community take part in general discussions; however, specialised studies or courses are held in every field. In these cases every organisation interested in the particular subject is represented.

All that is asked for participants is that they spread the knowledge and experience gained amongst their fellow citizens. In the case of W.I.A. representatives, dissemination is via W.I.C.E.N., the object being to ensure that a maximum number of skilled personnel will be ready to meet any emergency.

Amateurs willing to help in this work should advise their Divisional W.I.C.E.N. Co-ordinator who will arrange for their names to be added to the list of nominees to be forwarded to the Premier's Office. The success of W.I.C.E.N. depends entirely upon the enthusiasm of members.

As an example, the Victorian W.I.C.E.N. group are to participate in a large scale exercise this month. The success of this exercise from an Institute viewpoint is important from the accorded status, but even more so from the aspect of the practical application of the Amateur's knowledge of communications.

FEDERAL EXECUTIVE, W.I.A.

CONTENTS

An S.s.b. Transceiver for 52 Mc. 2
Further Notes on Winding Transformers 8
Ross Hull Memorial V.h.f. Contest, 1964-65 9
Signals Service Course 11
New Call Signs 11
R.S.G.B. 21-28 Mc. Telephony Contest 11
D.X.C.C. Contest 8
Sunspot Activity 15
DX 12
Federal and Divisional Monthly News Reports 17
Publications Committee Reports .. 15
SWL 15
VHF 13
Youth Radio Clubs 14

AN S.S.B. TRANSCEIVER FOR 52 Mc.

I. F. BERWICK, VK3ALZ*

A comparison of the block layout for the 52 Mc. Transceiver (Fig. 1) with the original circuit of the PT116 shows that four additional major components are required:—

1. A 48 Mc. v.f.o.
2. A 4 Mc. crystal filter.
3. A solid state d.s.b. generator.
4. If mobile operation is intended, a new power supply.

Each of these components is built and aligned as a separate sub-assembly. The order in which they are made is of no consequence and can be done according to availability of components, etc. Be prepared to devote quite a few man-hours to each of these assemblies.

Notes on the circuitry, layout and alignment of each sub-assembly appear later, plus diagrams.

● The author has converted a Pye Reporter PT116 to a 52 Mc. S.s.b. Transceiver. A conversion for any other frequency from 3.5 to 144 Mc. is equally possible.

3. Convert Receiver front-end to 52 Mc. This is done as follows:—

(a) Remove coil assembly of L2, L3, L4, re-wind coils with 8 turns 18 B. & S. enamel, wind 2-turn link at cold end of L3. Tap L4 at 7 turns. Replace assembly.

(b) Remove and re-wind L1 with 9 turns 16 B. & S. enamel. Tap at 1½ turns. Replace L1.

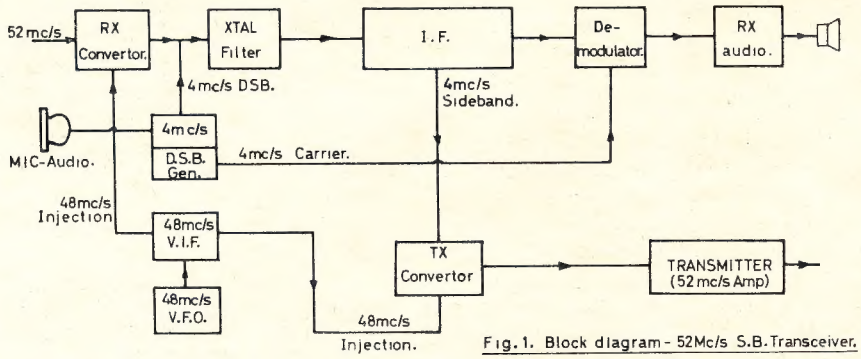

Fig. 1. Block diagram - 52Mc/s S.B. Transceiver.

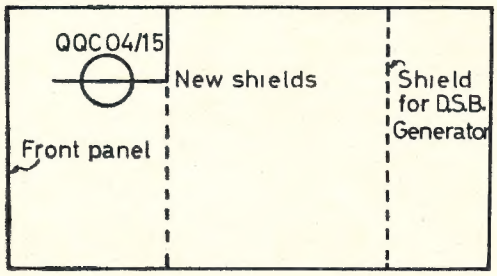

Fig. 2.—Position of New Shields.

The major assembly is the Pye Reporter unit. This is converted as follows:

1. Remove all redundant components and wiring—compare the new circuit with the old for this operation. The following components are redundant:—
   (a) Vibrator power supply.
   (b) IFT3.
   (c) IFT1—the can is saved for crystal filter.
   (d) Mike transformer.
   (e) Socket of V10 and its grid wiring.
   (f) Terminal strip for carbon microphone
   (g) Terminal strip for crystal oscillator V4 and crystal oscillator V12—also crystal sockets.

2. Convert IFT2, IFT4, IFT5 to 4 Mc. Remove 100 pF. across each winding and replace with 33 pF. Then replace IFT2, IFT4, IFT5.

(c) L1, L2, L4 are now grid dipped at 52 Mc. L3 at 48 Mc.

(d) Wire in modifications to receiver audio circuitry.

(e) Mount crystal filter in can of IFT1 and instal in position on chassis.

(f) Fit d.s.b. generator and RL2, RL3 in power supply compartment. A shield partition is fitted to isolate this compartment from the main chassis.

(g) Fit socket for QQC04/15—a loctal type. This has to be lowered approx. 1" below chassis to accommodate the tube. The original shield across the socket will have to be modified to achieve this—additional shielding is added to completely isolate the p.a. tank.

The p.a. loading capacitor, an A.W.A. concentric trimmer with screw-driver adjustment, is mounted on the side wall in the p.a. tank compartment. Wind and instal new p.a. coil and loading (link) coil.

Fit a shim brass shield across underneath chassis as shown in Fig. 2.

Mount connectors for mic. input, v.f.o. input, and antenna.

Complete wiring of Reporter unit—running all supply wiring in shielded cable.

Refer to drawings for layout of various components (Figs. 3 and 4).

CRYSTAL FILTER ALIGNMENT

The performance of the transceiver is critically dependent on this component. I include in some detail two alternative alignment procedures.

Method 1 is the more speedy and accurate method. The test set-up is as per Fig. 5.

With this set-up the filter response curve is viewed directly on the c.r.o. screen. See Fig. 6.

It is now a comparatively simple matter to correctly align the filter.

TR3 and TR4 (Fig. 7) should be resonated at 4 Mc. If the camel hump is not now symmetrical, TR4 should be detuned from resonance slightly, either higher or lower until symmetry is achieved.

R should now be varied to try and further improve the response curve—47K to 39K should give a satisfactory result.

If it is desired to measure the pass bandwidth proceed as in Method 2.

If a satisfactory response cannot be obtained, check that IFT1 is correctly tuned. If still unsatisfactory, filter will have to be re-built. Proceed as follows:

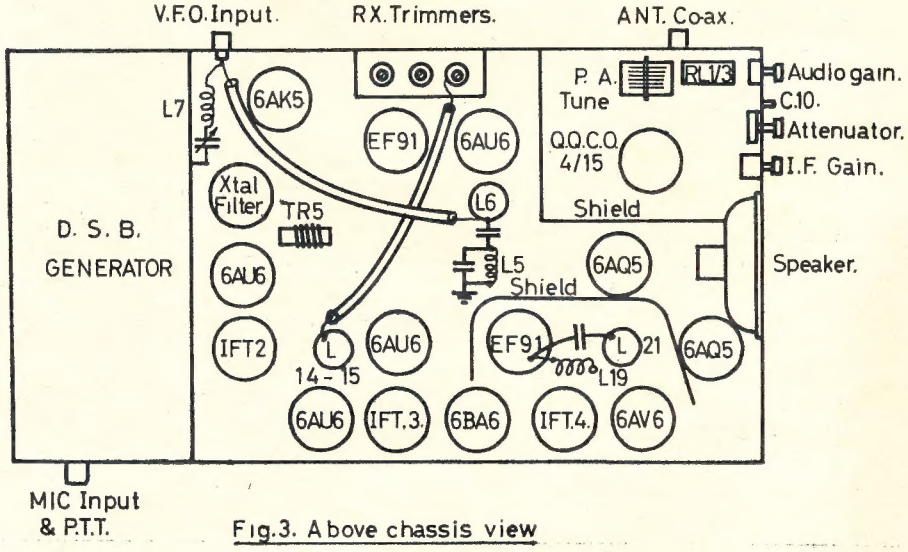

Fig. 3. Above chassis view

* 107 Loongarra Avenue, Glenroy, Vic.

Dismantle filter, check pole-zero spacing of each crystal. Measure pole frequencies. There should be two f_1 crystals (±50 c.p.s.) and two f_2 crystals, where $f_1 \approx f_2$ = pole-zero spacing.

If not, crystals will have to be shifted around until this is so—either by etching or grinding. Frequency can be lowered if desired by rubbing a little solder onto the quartz. Re-build filter when crystals are OK and repeat alignment procedure.

For the average FT243 filter a response of 3 kc. at 6 db. down and 12 kc. at 60 db. is considered satisfactory with passband ripple not exceeding 3 db.

Method 2: Test set-up as per Fig. 8. Proceed as follows:

(1) Assuming d.s.b. has been previously aligned, insert carrier by unbalancing VR1 (Fig. 16, d.s.b. gen.)—a smooth stripe should appear on c.r.o. screen (audio generator should be off). Peak TR3, TR4 for maximum stripe width.

(2) Remove carrier, inject audio signal (1,000 c.p.s.). If filter correct a nearly smooth stripe should appear. If not, carrier and/or unwanted sideband are present, as Fig. 9.

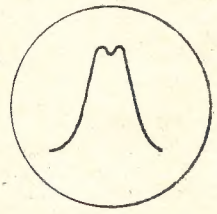

FIG. 6

It is now possible to measure (a) the pass-band response by plotting stripe height in inches or volts (if the c.r.o. is calibrated) against frequency, using db. = 20 log $E_1 \div E_2$, where E_1 is the maximum stripe height; (b) the stop-band response by plotting stripe ripple against frequency, using db. = 20 log $E_1 \div E_2$, where E_1 and E_2 are as in Fig. 10.

When a picture of the response curve is obtained by this method, the necessary adjustment of TR4 and R can be made to complete the alignment of the filter.

In this discussion no mention has been made of the frequency of the carrier crystal relative to the filter. In v.h.f. it is usual to use upper sideband.

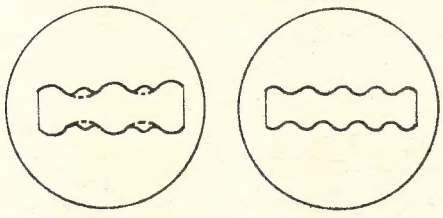

FIG 9A
1 Sideband + carrier

FIG 9B
2 Sidebands no carrier

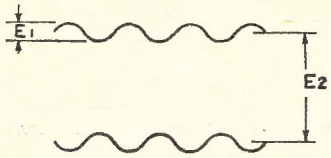

FIG. 10.

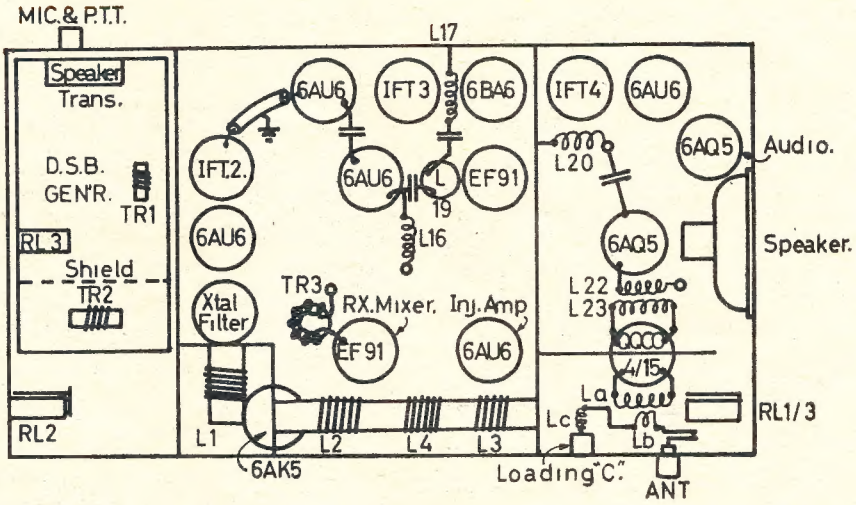

Fig.4. Under chassis view.

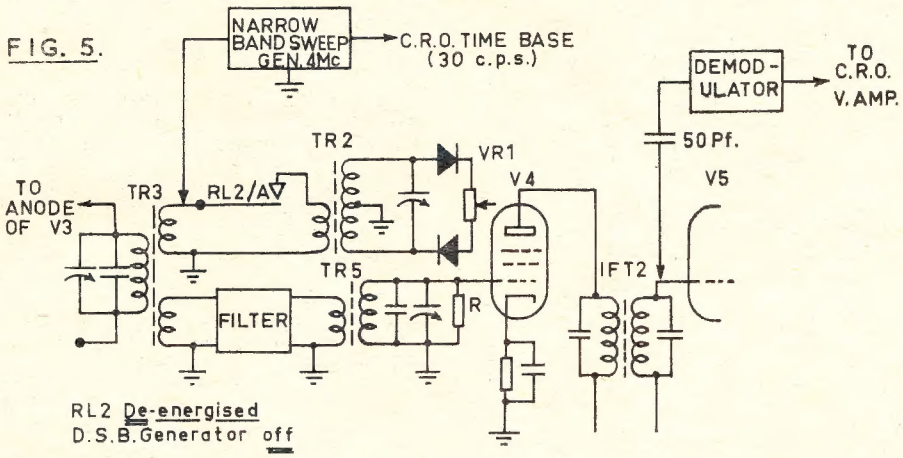

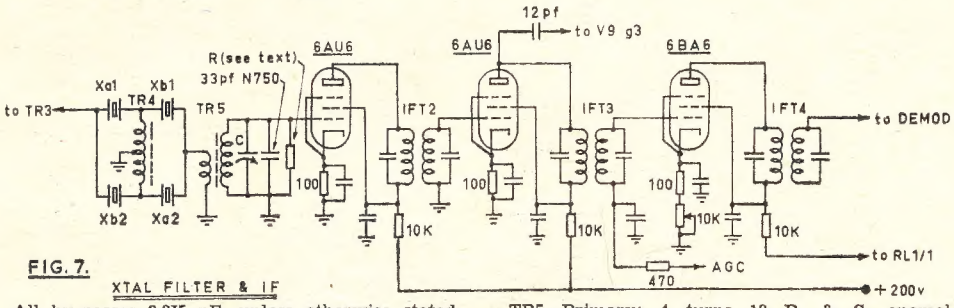

FIG. 7.
XTAL FILTER & IF

All by-passes 2.2K pF. unless otherwise stated.
C—Philips trimmer.
TR4—18 turns 18 B. & S. enamel on Q2 toroid (Ducon).
TR5—Primary: 4 turns 18 B. & S. enamel; Secondary: 14 turns 14 B. & S. on Q2 toroid.
Xa1, Xa2—4000.0 kc.
Xb1, Xb2—4002.0 kc.

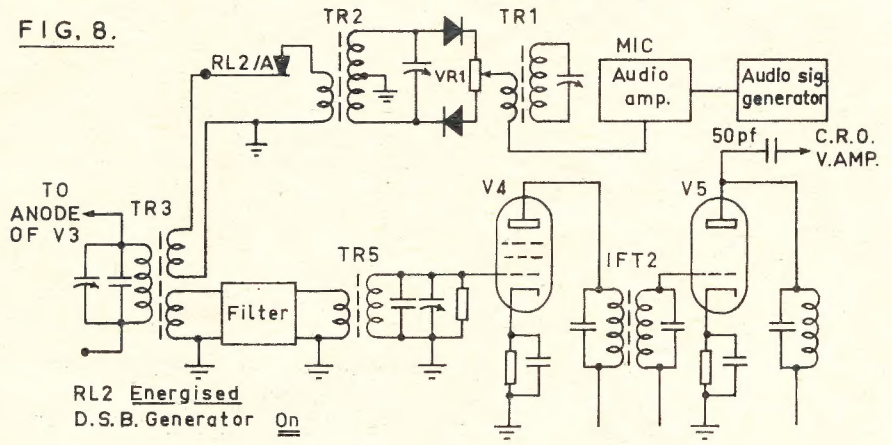

It is the practice, therefore, to set the carrier frequency 20 db. down the i.f. skirt of the filter.

This occurs usually when the pole of the carrier crystal is approx. 400 c.p.s. lower than the pole of the l.f. crystals in the filter.

The carrier crystal should be ground to this frequency (i.e. f_1 —400) and the alignment as described carried out.

If the tests indicate that a shift in carrier crystal is desirable, this may be done at any time after the alignment of the filter.

Alignment Pictures

Method 1—Fig. 11:

A—TR4 not correctly tuned, unsymmetrical hump, stop-band pop-up.

B—TR4 tuned too far in other direction.

C—TR4 correctly tuned, but R too large.

D—Correct response, TR4 OK, R OK.

FIG 11A

FIG 11B

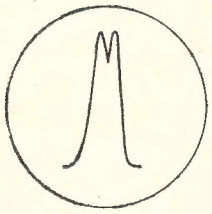

FIG 11C

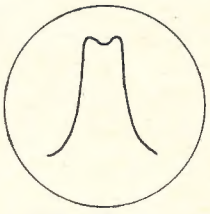

FIG 11D

Method 2—Fig. 12:

A—Smooth stripe, carrier only.

B—1,500 c.p.s. sideband, ref. level 0 db., suppression of unwanted sideband ≈ 25 db., carrier suppression 50 db.

C—500 c.p.s. sideband, ref. level —6 db., s.b. suppression ≈ 10 db., carrier suppression 50 db.

D—3,000 c.p.s. sideband, ref. level —6 db., s.b. suppression 35 db., carrier suppression 50 db.

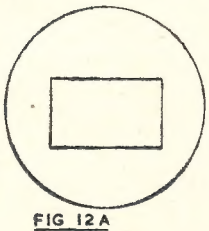

FIG 12A

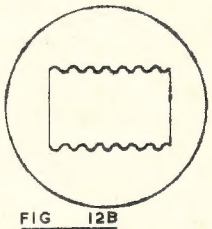

FIG 12B

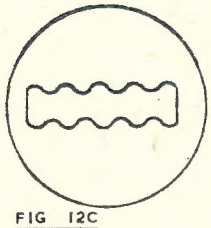

FIG 12C

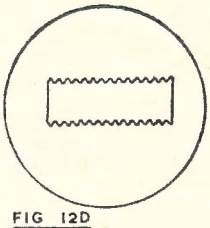

FIG 12D

V.I.Fs.

I propose to make a few remarks introductory to this important subject. I hope to make a further discussion at a later date in connection with a 144 Mc. s.b. transceiver I am developing.

A v.i.f. (variable i.f.) is a device which passes a signal tuneable over a specified range without appreciable attenuation, but highly attenuates all other signals outside this range.

Spurious signals from the injection sources which fall in the v.i.f. and pass through unattenuated are called cross-overs. A very important aspect of v.i.f. design is reduction of cross-over energy. V.i.f's. may be divided into four basic types—

(1) Mechanically or electrically ganged to v.f.o.

(2) Bandpass.

(1) and (2) are further sub-divided into (a) injection v.i.f., (b) signal (or s.b.) v.i.f.

I have used type 2a in my transceiver.

I state without proof the rules for v.i.f. design—

(1) V.i.f. tuning range (or bandwidth) should be minimal contingent upon other design factors, e.g. 200 kc.

(2) The amplitude of a spurious cross-over is an inverse function of its order. Therefore spurious cross-overs should be of high order.

Example: If $f_{VIF} = f_{VFO} + N\ f_{XTAL}$ and $f_{SP} = f_{VIF}$, where $f_{SP} = R\ f_{VFO} - S\ f_{XTAL}$, f_{SP} is said to be of order R + S. For small energy at f_{SP}, (R + S) should be large. Note: R, S, N are integers.

(3) $f_{VIF} \div f_{VFO}$, $f_{VIF} \div N\ f_{XTAL}$, $N\ f_{XTAL} \div f_{VFO}$ — Should not be integers, or if integers, should be large, i.e. > 3.

Readers requiring further information at this stage should consult Collins S.B. Handbook.

It will be seen that in my transceiver tuning range is somewhat greater than is customary, but choice of v.i.f., v.f.o. and crystal are good so that this factor is less serious than it might have been.

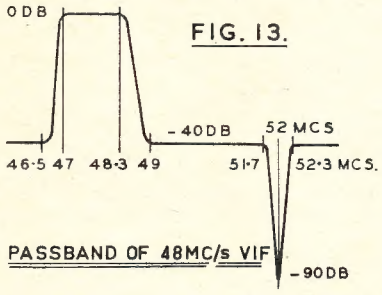

FIG. 13.

Fig. 13 shows the pass-band characteristic of the 48 Mc. v.i.f. This v.i.f. consists of two low pass constant K sections, cut-off 49 Mc., plus two high pass constant K sections, cut-off 46.5 Mc., plus shunt traps to give a notch at 52 Mc. (See Fig. 14.)

52 Mc. TX SECTION

This is explained by reference to the circuit of Fig. 15. A top coupled filter is used between 6AU6 mixer and EF91 class A. This, in conjunction with an absorption trap, prevents the 48 Mc.

FIG. 14. 48 MC/S V.I.F.

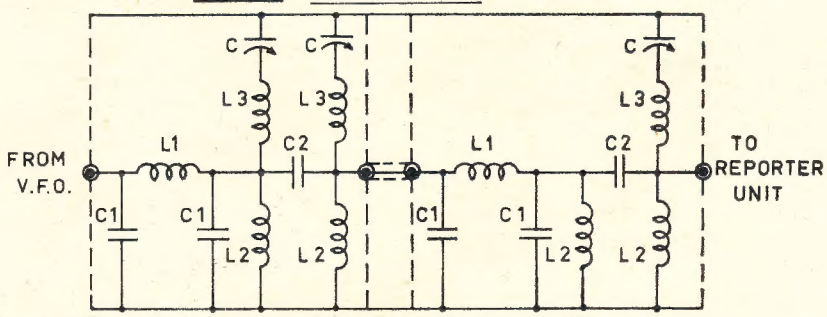

C—3-30 pF. Philips trimmer.
C1—56 pF. ceramic.
C2—33 pF. ceramic.
L1—5 turns 16 g. tinned copper, spaced wire diameter. ½ inch diam.
L2—4 turns, ditto.
L3—9 turns 18 B. & S. enamel, close spaced. ½ inch diameter. All coils self supporting.

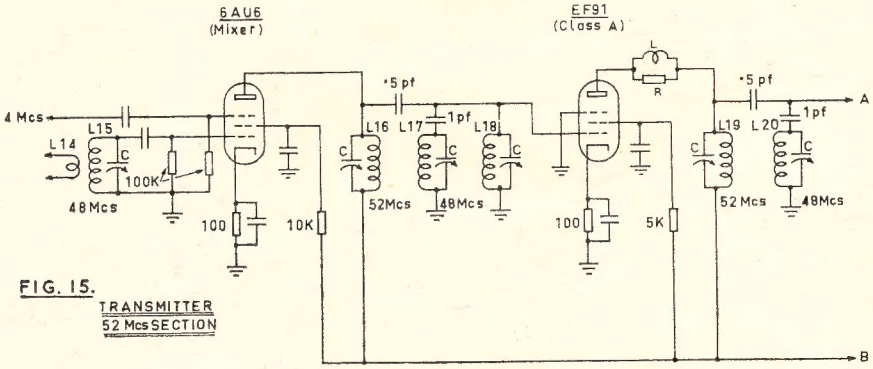

FIG. 15. TRANSMITTER 52 Mcs SECTION

All by-passes 14 pF. ceramic unless otherwise specified.
C—3-30 pF. Philips trimmer.
CN—Philips trimmer, cut down to two plates (1 fixed, 1 moving).
R, L—5 turns 22 B. & S. wound on 47 ohm ¼-watt carbon resistor.
La—10 turns 14 g. tinned, ¾ inch diam. c.t.
Lb—2 turns 14 g. tinned, ½ inch diam.
Lc—4 turns 16 g. enamel, 3/8 inch diam.

injection voltage from appearing at the EF91 grid and driving this stage into non-linearity. A similar circuit arrangement is used between EF91 and 6AQ5, the 6AQ5 being neutralised. Parasitic chokes are fitted in the anodes of the EF91, 6AQ5 and QQC04/15.

The final anode tank is designed to match a 50 ohm load to a 12,000 ohm plate-to-plate impedance.

Alignment of this section is straightforward. All tanks are grid-dipped to the appropriate frequencies. Neutralise the 6AQ5 according to accepted practice, peak the 52 Mc. coils for maximum drive at 52.5 Mc., adjust the traps for minimum 48 Mc. feedthrough, and carry out linearity checks of the final according to the approved procedure.

D.S.B. GENERATOR

The active components in this section are solid state to save space, and simplify the mechanical considerations. The complete unit is wired on a matrix board which fits neatly in the space vacated by the power supply. All information necessary for its construction is given in Fig. 16.

The diodes should be selected so that their forward resistances are approximately matched. Diodes having low forward resistance are preferable.

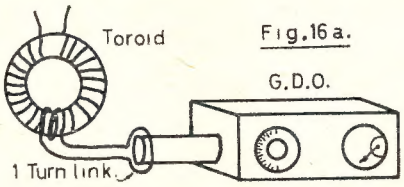

Alignment: (1) Check preamplifier for gain and linearity with c.r.o. and audio sig.-gen. Gain should be 25-30 db. which is more than adequate for most crystal microphones. Since only several hundred millivolts are required to drive the balanced modulator, gain can be reduced by lowering the value of the negative feedback resistor.

(2) Grid-dip carrier oscillator and bal. mod. toroid TR1 and TR2 at 4 Mc. Note: Toroids have no external field. Use set-up shown for grid-dipping in Fig. 16A.

Check carrier oscillator frequency and output. Approx. 1.5v. r.m.s. should appear across secondary of carrier oscillator tank (TR1).

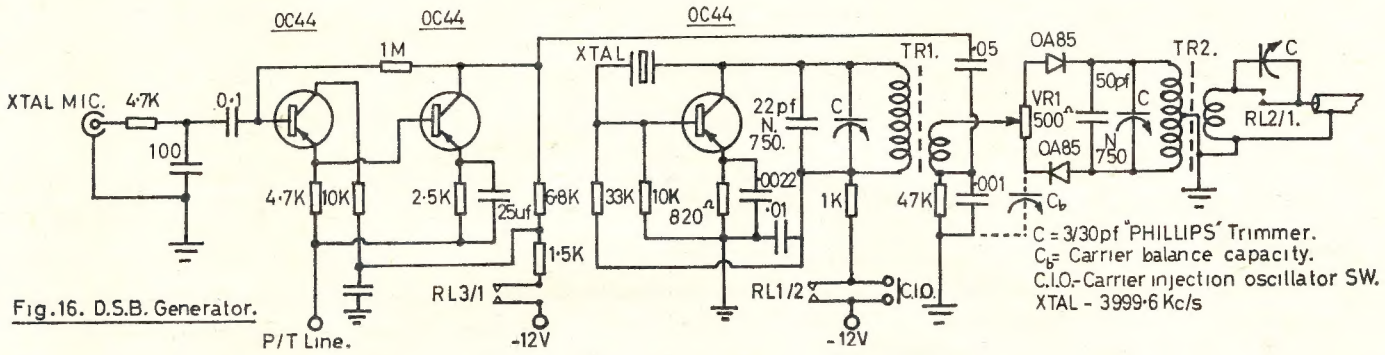

Fig.16. D.S.B. Generator.

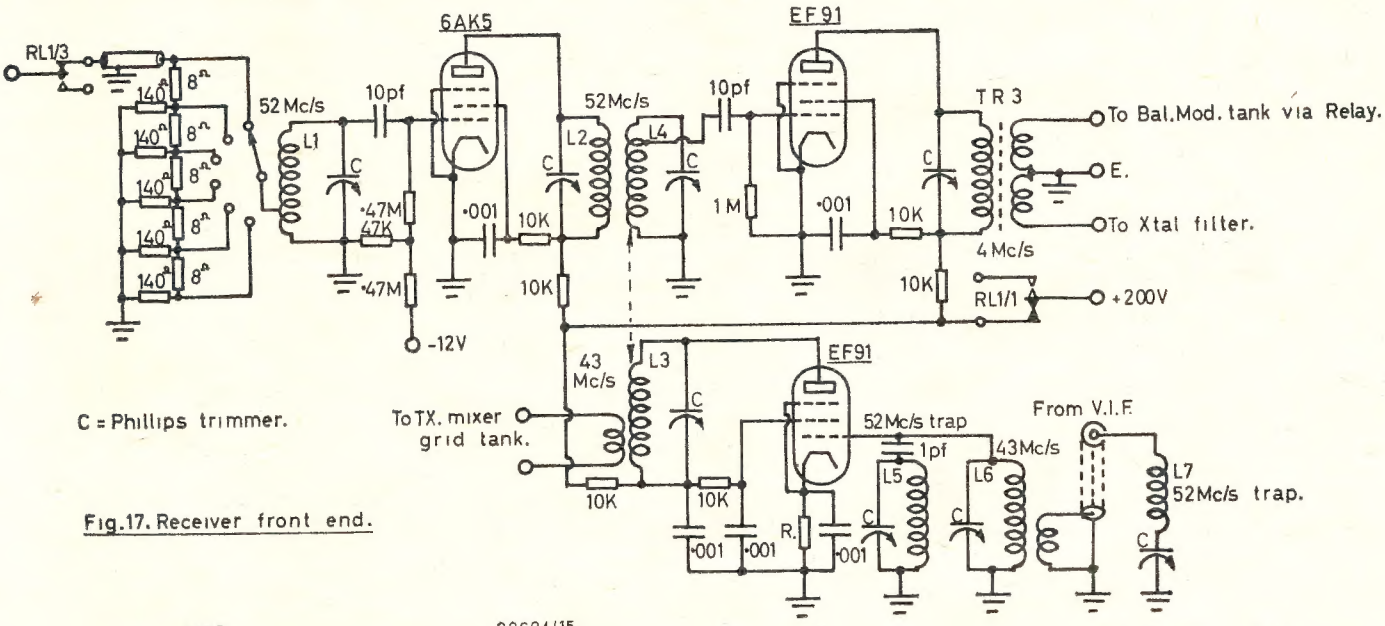

Fig.17. Receiver front end.

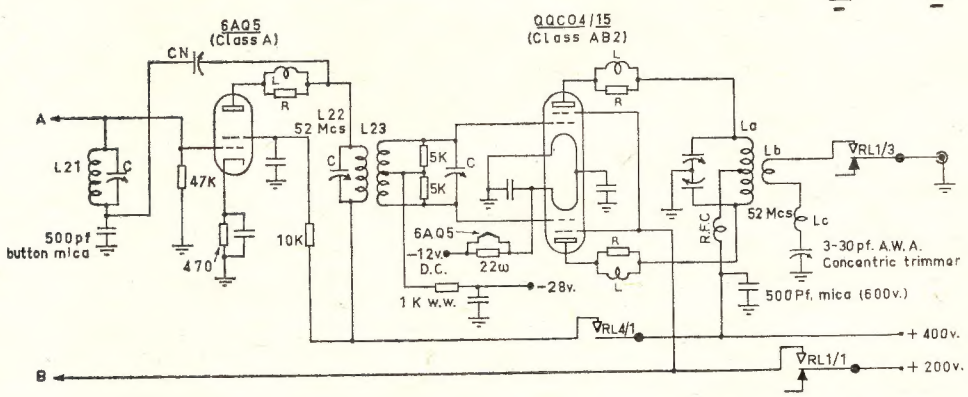

Fig. 16 Parts List

D1, D2—OA85s.
Q1, Q2, Q3—OC44.
TR1—Primary: 14 turns 14 B. & S.; secondary: 4 turns 18 B. & S.
TR2—Primary: 14 turns 14 B. & S. c.t.; secondary: 4 turns 18 B. & S. Both TR1 and TR2 on Q2 toroids (Ducon).

Fig. 17 Parts List

All by-passes are 1K pF. ceramic.
C—Philips trimmer.
R1—8 ohms, carbon.
R2—140 ohms, carbon.
L1—9 turns 16 B. & S., tapped 1.5 turns.
L2, L3, L4—8 turns 18 B. & S. L4 tapped at 7 turns. Wind two-turn link at cold end of L3.
TR3—Primary: 14 turns 14 B. & S.; Secondary 1 and 2: 4 turns 18 B. & S. each. Core Q2 toroid.

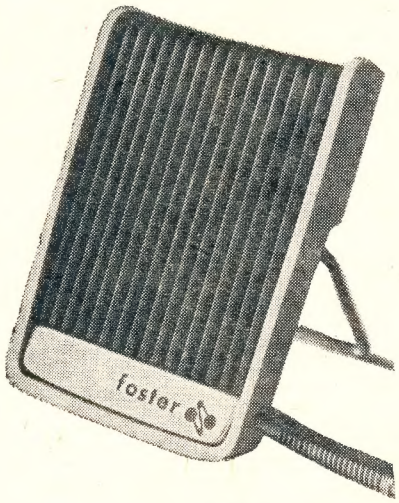

DF-2

FOSTER DYNAMIC MICROPHONES

FOR HAND-DESK USE

SPECIFICATIONS:

Output Impedance .... 50 ohms or 50K ohms
Effective output level .... —55 db. [0 db. = (one) 1V. Microbar]
Frequency response .... 200 to 10,000 c.p.s.

OMNI-DIRECTIONAL DYNAMIC:

SIZE: 3" x 2-1/8" x 1".
Cable: 12 ft. of P.V.C.
Switch: on-off.
Desk Stand. Clip folds for hand use.
Colour: WHITE.
Plastic Diaphragm.

Retail Price
50K ohms
£2/10/7
+ Sales Tax 5/3

A QUALITY PRODUCT OF EXCELLENT DESIGN

Marketed by **ZEPHYR PRODUCTS PTY. LTD.**

58 HIGH STREET, GLEN IRIS, S.E.6, VICTORIA Phones: 25-1300, 25-4556

Manufacturers of Radio and Electrical Equipment and Components

Agents: D. K. Northover & Co.; Neil Muller Ltd.; Homecrafts (Tas.) P/L.; Jacoby, Mitchell & Co. P/L.; T. H. Martin P/L.

JUST ARRIVED! NEW 1964 EDITIONS!

★ A.R.R.L.—Radio Amateur's Handbook

Price 51/6 and 2/6 Post.

The Standard Manual of Amateur Radio Communication

★ The Radio Transistor Handbook

by Stoner & Earnshaw **Price 63/6 and 1/9 Post.**

THIS UP-TO-DATE HANDBOOK COVERS A WIDE RANGE OF COMMUNICATION FOR BOTH AMATEUR RADIO & COMMERCIAL APPLICATIONS

Get your copies now from

McGILL'S AUTHORISED NEWSAGENCY

Established 1860 183-185 ELIZABETH STREET, MELBOURNE, C.1, VIC.

"The G.P.O. is opposite" Phones: 60-1475--6-7

Check carrier balance, the potentiometer is the coarse balance control and the capacitor the fine control. It will be necessary to find by experiment across which arm of the balanced modulator the capacitor should be placed. 40 db. carrier suppression should be achieved without difficulty. (Remember that a further carrier attenuation occurs in the filter.)

Check double sideband output in the receiver or c.r.o. for intermodulation distortion. Linearity should be satisfactory if the operating conditions for diode balanced modulators are adhered to.

RECEIVER FRONT-END

Concurrent with modern practice, a stepped attenuator is incorporated. This is mounted on the front panel. The speaker transformer has to be shifted to the rear side wall to make room for this. The 48 Mc. injection amplifier 6AU6 runs all the time. The h.t. to the 6AK5 and EF91 is removed by RL1/1 during transmit, so disabling these stages. See Fig. 17.

The first two i.f. stages run at constant gain at all times. The third i.f. stage has both manual and automatic gain control.

The manual gain potentiometer is mounted on the front panel as follows: Remove top right hand speaker mounting screw, drill a 3/8-inch clearance hole, using the old mounting hole as centre. Mount miniature 10K potentiometer in this hole.

NOISE LIMITER, DEMODULATOR AND AUDIO AMPLIFIERS

This section (Fig. 18) is largely unchanged from the original Reporter circuitry. Carrier for s.b. demodulation is injected into the i.f. after the mixer.

This is achieved as follows: When RL2 is de-energised during receive, thus removing the load from the bal. mod. tank, the balanced modulator becomes unbalanced. A Philips trimmer wired across the contacts of RL2 provides a means of adjusting the level of carrier injected into the i.f.

Carrier derived a.g.c. is shown on the circuit (Fig. 18). An audio derived a.g.c. system on a matrix board sub-assembly is available for fitting, this is not shown as most people seem to have their own preferences with respect to a.g.c. systems.

48 Mc. V.F.O.

This is constructed as an outboard unit designed for mounting on the steering column of a motor vehicle. The 5 Mc. v.f.o. is a modified Command unit. The heterodyning section and the 48 Mc. v.i.f. are mounted in separate shielded compartments at the rear of the modified Command unit. (See Fig. 19.)

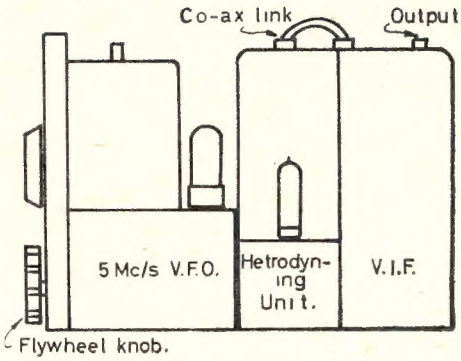

Fig.19. 48Mc/s V.F.O.(side view)

The modification to the Command unit is as follows:—

(1) Remove all wiring under chassis.

(2) Remove front panel, disconnect bowden drive to oscillator capacitor.

(3) Cut through chassis in a line with front of oscillator capacitor.

(4) Mount front panel on the oscillator portion of the chassis so that the tuning gears line up with the oscillator capacitor drive gear.

(5) Wire up as per circuit (Fig. 20). The oscillator is a Franklin followed by a cathode follower and then a class A tuned stage.

(6) Fit a large flywheel tuning knob.

The construction of the heterodyning unit and v.i.f. is straightforward and the diagrams should be self explanatory. Note that these stages run all the time.

(Continued on Page 8)

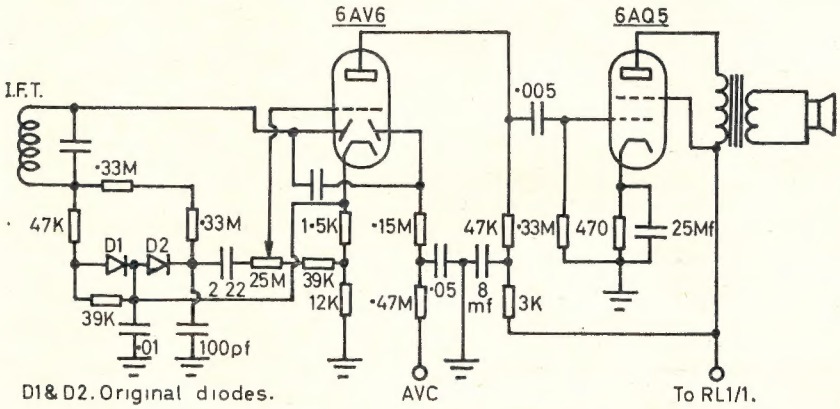

Fig.18. Receiver noise limiter - demodulator & audio amplifier.

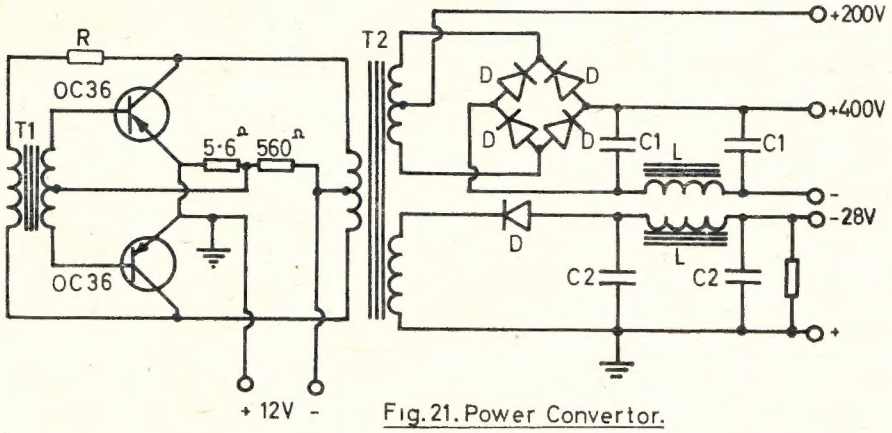

Fig.21. Power Convertor.

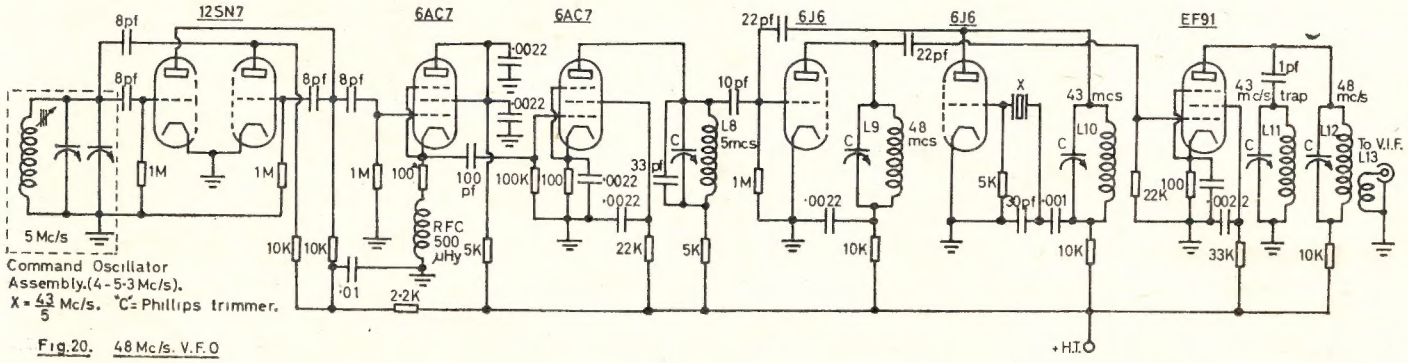

Fig.20. 48 Mc/s. V.F.O

FURTHER NOTES ON WINDING TRANSFORMERS

In his article, "Re-winding Transformer" ("A.R.," Sept. 1964), Ian Phillips has stated a way to determine the turns per volt of the windings. I do not wish to be unkind, but his method is misleading.

The turns of a 5 or 6.3 volt winding are not necessarily a multiple of 5 or 6 respectively. A power transformer is designed to give correct heater voltages on load (all windings normally fully loaded).

The following factors are taken into account to arrive at t.p.v.:—

Flux density (core loss),
Wire gauges (copper loss),
Increase in wire resistance with temperature rise,
The final estimated working temperature above ambient.

These determine the transformer "regulation".

A typical design of about 100 to 150 watts rating would probably use a core of the E and I waste-free type, either a 1¼" centre leg and 2" stack, or 1½" centre leg and 1½" stack. Core material is a matter of size and temperature rise, and can vary accordingly.

However, to get to the point, the heater winding voltages **off load** and therefore the turns depend on the factors stated earlier. This may be seen from the figures given in Table 1, and the same applies to other core sizes and areas.

Core Leg × Stack (Inches)	Appro. Net Area (Sq. In.)	T.P.V. for Flux in Kgausses*		
		10	11	12
1½ × 1½ 1¼ × 2	2.1 2.3	3.3 3	3 2.75	2.75 2.5
Turns 5v. wdg.	→ 2.1	18 (5.46)	16 (5.32)	15 (5.46)
Turns 6.3v.wdg.	→ 2.1	22 (6.67)	20 (6.68)	19 (6.9)

Table 1.
Figures in brackets are typical "off-load" voltages.
* Multiply by 6.45 for K lines/sq. in.

It will be seen that a winding of 18 turns could be a 5v. or 19 turns a 6.3v. winding. Therefore, with a faulty transformer, it is a little difficult, if not impossible, to arrive at the t.p.v. If not faulty, the turns of the heater winding divided by the off-load volts will give the t.p.v. provided the correct voltage is applied to the primary, and the meter is reasonably accurate. (All secondary windings unloaded.)

The only other way is to assume a normally used flux density, e.g. 11 Kgausses or approx. 70,000 lines, and the t.p.v. is near enough to 6.8 divided by the cross-section area in square inches as measured with a rule. This gives you a fair chance of being "near the mark" or can be used for a complete re-wind.

—Andy Roudie, VK3UJ.

BRIGHT STAR CRYSTALS

FOR ACCURACY, STABILITY, ACTIVITY AND OUTPUT

Our Crystals cover all types and frequencies in common use and include overtone, plated and vacuum mounted. Holders include the following: DC11, FT243, HC-6U, CRA, B7G, Octal, HC-18U.

THE FOLLOWING FISHING-BOAT FREQUENCIES ARE AVAILABLE IN FT243 HOLDERS:—
6280, 4095, 4535, 2760, 2524 Kc.

5.500 Kc. T.V. Sweep Generator Crystals, £3/12/6.
100 Kc. and 1000 Kc. Frequency Standard, £8/10/0 plus 12½% Sales Tax.
Immediate delivery on all above types.

AUDIO AND ULTRASONIC CRYSTALS—Prices on application.
455 Kc. Filter Crystals, vacuum mounted, £6/10/0 each plus 12½% Sales Tax.

ALSO AMATEUR TYPE CRYSTALS—3.5 AND 7 Mc. BAND.

Commercial—0.02% £3/12/6, 0.01% £3/15/6. plus 12½% Sales Tax.
Amateur—from £3 each, plus 12½% Sales Tax.
Regrinds—Amateur £1/10/0, Commercial £1/17/6.

CRYSTALS FOR TAXI AND BUSH FIRE SETS ALSO AVAILABLE.
We would be happy to advise and quote you.

New Zealand Representatives: Messrs. Carrel & Carrel, Box 2102, Auckland.
Contractors to Federal and State Government Departments.

BRIGHT STAR RADIO

46 Eastgate Street, Oakleigh, S.E.12, Vic. Phone: 57-6387

With the co-operation of our overseas associates our crystal manufacturing methods are the latest.

S.S.B. TRANSCEIVER

(Continued from Page 7)

POWER CONVERTER

A suitable power unit is shown in Fig. 21.

T1: primary 100 turns of 22 B. & S. secondary 50 turns c.t. of 22 B. & S. Core: Ducon Q1 toroid.

T2: primary 62 turns c.t., 16 B. & S. secondary (1), 600 turns c.t., 26 B. & S.; secondary (2), 100 turns, 26 B. & S. Core: Permalloy C core, 100 v.a. rating. Note: Core from APX-1.

A suitable control unit is shown in Fig. 22.

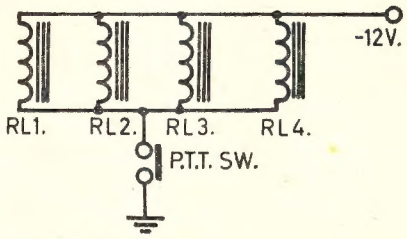

Fig. 22. Control circuit.

CONCLUSION

A complete transceiver has been described. Enough information has been presented to enable a transceiver to be designed for any frequency—3.5 to 144 Mc.—using Reporter components.

By building one's own along the lines indicated, it is possible to enjoy the advantages of transceiver operation at a small fraction of the cost of commercial units.

Finally I am indebted to VKs 3AHL, 3ADF and 3ZCZ for numerous suggestions which have proved invaluable during the development of this unit. ●

☆

D.X.C.C. CONTEST

"All the DX you can work in a year" is the object of the First Annual D.X.C.C. Contest being sponsored by the Long Island DX Association in order to stimulate DX activity throughout the world.

The Contest will begin at 0001 G.M.T., 1st January, 1965, and end at 0000 G.M.T., 31st December, 1965. Contestants will be required to work as many different countries over 100 as possible in order to be eligible for the special prizes which will be offered by the L.I.D.X.A. Any mode and any band may be used but **just one confirmation** from each country will count. The Contest will be based on A.R.R.L. D.X.C.C. rules and the A.R.R.L. Countries List will be followed.

The prizes to be awarded to the winners include the Long Island DX Association Trophy, going to the top scorer in the world; six unique trophies, one to be awarded to the top scorer on each of the six continents; and individual certificates to be awarded to the top scorers in each country from which entries are submitted as well as winners in each of the U.S.A., Canadian and Australian districts.

At the close of the Contest, participants will be required to submit just their **lists of confirmed countries worked** to "L.I.D.X.A. Contest," P.O. Box 599, Lynbrook, New York, with postmarks no later than February 15, 1966. Potential winners will be notified and will be requested to submit all their Contest QSLs to the Contest Committee whose members are: Joe Hellman, W2MES; Dorothy Strauber, K2MGE; Win Tames, WA2QNW; and Marv. Fricklas, W2FGD. A complete list of winners will be published as soon as the committee has completed the tabulation of the entries. For any additional information, contact the L.I.D.X.A. Contest Committee members via P.O. Box 599, Lynbrook, New York.

—VK4SS.

ROSS HULL MEMORIAL V.H.F. CONTEST, 1964-65

The Federal Contest Committee of the Wireless Institute of Australia invites all Australian and Overseas Amateurs and Short Wave Listeners to participate in this annual Contest which is held to perpetuate the memory of the late Ross Hull whose interest in v.h.f. did much to advance the art.

A handsome Perpetual Trophy is awarded annually for competition between members of the W.I.A. in Australia and its Territories, inscribed with the name and life work of the man whom it honours. The name of the winning member of the W.I.A. each year is also inscribed on the Trophy. In addition, this member will receive a suitably inscribed, framed photograph of the Trophy.

Objects: Amateurs in each VK Call Area will endeavour to contact Amateurs in other Australian Call Areas and Overseas.

Date of Contest: 12th December, 1964, to 10th January, 1965.

Duration: From 0001 hours E.A.S.T. (1401 hours G.M.T.) on 12/12/64 and 11/12/64 respectively, to 2359 hours E.A.S.T. (1359 hours G.M.T.) on the 10/1/65.

RULES

1. There shall be three main sections to the Contest:
   (a) Transmitting, Open, 52 Mc. and higher.
   (b) Transmitting, Phone, 52 Mc. and higher.
   (c) Receiving, Open, all bands, 52 Mc. and higher.

2. All Australian and Overseas Amateurs may enter for the Contest whether their stations are fixed, portable or mobile.

3. All Amateur v.h.f. bands may be used, but no cross-band operating is permitted.

4. Amateurs may enter for any one of the transmitting sections. All contacts must be consecutively numbered in the one number sequence to facilitate checking.

5. Only one contact per band per station is allowed each calendar day.

6. Only one licensed Amateur is permitted to operate any one station under the owner's call sign. Should two or more operate any particular station, each will be considered a contestant and must submit a separate log under his own call sign.

7. Entrants must operate within the terms of their licences.

8. **Cyphers**: Before points may be claimed for a contact, serial numbers must be exchanged and acknowledged. The serial number of 5 or 6 figures will be made up of the RS (telephony) or RST (c.w.) report plus three figures commencing from 001 for the first contact and will increase in value by one for each successive contact. If any contestant reaches 999 he will start again with 001.

9. **Entries** must be set out as shown in the example, using only one side of the paper. Entries must be postmarked not later than one month after the Contest (i.e. not later than 10/2/65) and be clearly marked "Ross Hull Memorial V.h.f. Contest, 1964-65," and addressed to the **Federal Contest Committee, W.I.A., Box 638J, G.P.O., Brisbane, Queensland.**

10. **Scoring** for all sections will be based on the attached table. Contestants will have to agree between themselves as to the distance between their stations. Such distances must be shown in their log entry in the column usually used for remarks or bonus points.

11. **Logs**: All logs shall be set out as in the example and in addition will carry a front sheet showing the following information:

Name .....Call Sign .....

Address.....Section .....

.....Claimed Score ..

Declaration: I hereby certify that I have operated in accordance with the Rules and Spirit of the Contest.

Signed.....

Date.....

Note: Entries on the front sheet must be clearly shown in block letters.

12. The right is reserved to disqualify any entrant who, during the Contest, has not observed the regulations or who has consistently departed from the accepted code of operating ethics.

13. The ruling of the Federal Contest Committee of the W.I.A. will be final. No dispute will be entered into.

14. **Awards**: Certificates will be awarded to the winners of each section in each VK and Overseas Call Area. The VK contestant who returns the highest score in the transmitting sections and who is a financial member of the W.I.A. will hold the Trophy until the next Ross Hull Contest is decided, and in addition will receive an appropriately inscribed photograph of the Trophy.

GENERAL

Several suggestions were received regarding the duration of the Contest being too long. It was suggested that the period of the Contest remain the same, but that contestants submit a log for a seven or nine-day period of the Contest. This period would be selected by the individual contestant. Before taking any steps in this direction we would like to have a much wider expression of opinion on this matter and comments are invited.

It is suggested that contestants obtain a large scale map of Australia and of their State and mark on these maps the radial distances from their location in accordance with the scoring table.

RECEIVING SECTION

1. Short Wave Listeners in Australia and Overseas may enter for the Contest, but no transmitting station may enter.

2. Contest times and logging of stations on each band are as for the transmitting sections.

3. To count for points, logs will take the same form as for transmitting sections but will omit the serial number received. Logs must show the call sign of the station heard (not the station worked), the serial number sent by it, and the call sign of the station being worked.

Scoring will be on the same basis as for transmitting stations. It is not sufficient to log a station calling CQ.

4. A station heard may be logged only once per calendar day on each band for scoring purposes, but additional reports will be of value to the F.C.C.

5. **Awards**: Certificates will be awarded to the highest scorer in each VK and Overseas Call Area.

SCORING TABLE

Distances Between Stations	52 Mc.	144 Mc.	420 Mc.	576 Mc.	Higher
Up to 10 miles			1	1	5
Over 10 and up to 25 miles			2	2	10
Over 25 and up to 50 miles			10	10	30
Over 50 and up to 100 miles	4	2	20	20	60
Over 100 and up to 200 miles	10	4	30	30	80
Over 200 and up to 300 miles	20	10	40	40	
Over 300 and up to 500 miles	10	16			
Over 500 and up to 1,000 miles ..	2	30			
Over 1,000 and up to 5,000 miles ..	10	40			
Greater than 5,000 miles	20	50			

EXAMPLE OF TRANSMITTING LOG

Date/ Time	Band	Emission	Call Sign	RST/NR. Sent	RST/NR. Rcvd.	Distance	Points Claim.	Blank

NOTE.—State whether Time is E.A.S.T. or G.M.T.

EXAMPLE OF RECEIVING LOG

Date/ Time	Band		Station Heard	RST/NR. Sent	Station Called		Points Claim.	Blank

NOTE.—State whether Time is E.A.S.T. or G.M.T.

GALAXY S.S.B. TRANSCEIVERS

Galaxy III.—80-40-20 Mx £230
Galaxy V.—Five Bands .. £300
Accessories:—
Crystal Calibrator £12½
Vox Unit £16

Accessories (continued):—
External **Second** V.f.o. .. £40
12v. d.c. power supply £80
12v. d.c. "Topaz" p. sup. £55
240v. a.c. power supply £30

All Prices **include** Sales Tax.

FEATURING—

- **Smallest 300-watt s.s.b./c.w. Transceiver—6" x 10¼" x 11¼". Weight 13 lbs.**
- **Full coverage on all bands. Linear tuned V.f.o. covers 500 kc. each band.**
- **Six-Crystal 9 Mc. Filter, bandwidth 2.1 Kc. at 6 db. down.**
- **U.s.b. or L.s.b. selectable, with illuminated indicators.**
- **Transistorised a.v.c, audio. Combined S meter and Plate Meter.**
- **A.l.c. boosts talk power and prevents "flat topping".**
- **Receiver sensitivity ½ microvolt for 10 db. S/N. Audio derived a.g.c.**
- **Free from pops and pumping.**
- **Grid block keying for c.w. Output impedance: 50 ohms, adjustable.**
- **Pi-Net range: 40-100 ohms, resistive. Reduced power tune position.**

DESCRIPTIVE LITERATURE UPON REQUEST

SIDEBAND ELECTRONICS ENGINEERING (ARIE BLES)
33 PLATEAU ROAD, SPRINGWOOD, N.S.W. **Phone 394**

CHOOSE THE BEST—IT COSTS NO MORE

RESIN CORE SOLDERS
for reliable connections

G. T. LEMPRIERE & CO. LIMITED. Head Office: 27-41 Bowden Street, Alexandria, N.S.W.
and at Melbourne • Brisbane • Adelaide • Perth

DURALUMIN, ALUMINIUM ALLOY TUBING

IDEAL FOR BEAM AERIALS AND T.V.

★ LIGHT ★ STRONG ★ NON-CORROSIVE

STOCKS NOW AVAILABLE FOR IMMEDIATE DELIVERY

ALL DIAMETERS—¼" TO 3"

Price List on Request

STOCKISTS OF SHEETS—ALL SIZES AND GAUGES

GUNNERSEN ALLEN METALS PTY. LTD.

SALMON STREET,
PORT MELBOURNE, VIC.
Phone: 64-3351 (10 lines)
Telegrams: "Metals," Melb.

ADELAIDE GAM MELBOURNE

HANSON ROAD,
WINGFIELD, S.A.
Phone: 45-6021 (4 lines)
Telegrams: "Metals," Adel.

LOW DRIFT CRYSTALS

FOR

AMATEUR BANDS

ACCURACY 0.01% OF STATED FREQUENCY

3.5 and 7 Mc.
Unmounted, £2/10/0
Mounted, £3/0/0

12.5 and 14 Mc.
Fundamental Crystals,
"Low Drift,"
Mounted only, £5.

THESE PRICES DO NOT INCLUDE SALES TAX.

Spot Frequency Crystals Prices on Application.

Regrinds £1/10/0

MAXWELL HOWDEN
15 CLAREMONT CRES., CANTERBURY, E.7, VICTORIA

THE NEW "A.R."

LOG BOOK

IS NOW AVAILABLE

Larger, spiral-bound pages with more writing space.

Price 7'6 each
including Postage

Obtainable from your Divisional Secretary, or W.I.A., P.O. Box 36, East Melbourne, C.2, Victoria.

SIGNALS SERVICE COURSE

Held at Macedon, Vic.

The No. 2 Signals Service Course, held at Macedon, Vic., from 6th to 11th September, was attended by 30 members, of these 20 were Amateurs

Present were: P. A. Alexander (VK-2PA), J. B. Battrick (VK3OR), K. V. Benwell (W.A.), L. Blagbrough (VK-4ZGL), S. Briggs (VK4SC), T. I. Cairnduff (Tas.), G. C. Casboult (Tas.), Major E. Collett (VK2RU), H. P. Fuller (VK8TF), M. W. German (VK4ZGM), R. G. Harris (VK5RR), R. H. Hildred (VK4RE), Sergeant R. G. Holdway (Qld.), T. A. Holmes (Vic.), P. B. Jackson (VK2ZPJ/T), C. E. Love (N.S.W.), M. J. McDonald (VK6MM), M. M. McGrane (VK4MZ), B. A. McRae (VK-5MC), P. L. Mahan (VK3AOY), L. A. Maschette (VK6ZDM), D. E. Melbourne (VK2NK), G. A. Middleton (VK5GO), R. A. Murphy (VK5ZDX), M. J. Owen (VK3ZEO), Rev. Bro. T. Radcliffe (N.S.W.), R. V. Saunders (N.S.W.), Major R. L. Topp (VK3QT), B. E. Wearne (N.S.W.), E. W. West (W.A.).

It is the first time that a course has been attended by so many people with a hobby as a common bond. The others are all connected with communications in some form or another.

The purpose of the course is to instruct the members of the duties of Signals Officers for the Civil Defence Services in Australia.

A background of nuclear, biological and chemical warfare was given.

Message writing, field telephones and cable laying, signal centre duties and records, raising and training personnel, radio procedure and exercises, and planning radio exercises were covered by the course.

One of the major factors evolved from this course was that no matter what form of communications you are using, the procedure in message handling must be standardised, so that confusion does not arise. A badly controlled and confused communication system is worse than no communications at all!

With the development of Civil Defence in the various States, Amateurs may be required to assist in the training and operating Civil Defence Signals Sections. We must attempt to get the most from our members who are attending these courses and there will no doubt in the future be others attending similar courses.

We all know that communications are the backbone of any service, be it private, public or civil. These Amateurs and the others are doing their best to prepare for natural and other disasters. What are you doing? Contact your local W.I.C.E.N. Co-ordinator and offer your services.

—Alyn Maschette, VK6ZDM.

NEW CALL SIGNS

JULY, 1964

VK1AXX—J. W. Hutchinson, C/o. Department of External Affairs, Administrative Office, Parkes, A.C.T.
VK1EM—E. J. Mulholland, Flat 11, Block 14, Northbourne Flats, Braddon, A.C.T.
VK2UU—G. A. Sangster, 23 Hollis Ave., Goulburn.
VK2BAE—D. C. Boundy, 201 Kennedy St., Armidale.
VK2ZFE—F. W. Alpin, Banksia St., Orange.
VK2ZFK—R. Bowden, 40 The Grove, Mosman.
VK2ZJI—A. J. Jones, 10 McAlister Ave., Engadine.
VK2ZMM—J. P. Mack, 78 The Crescent, Cheltenham.
VK3LL—M. W. Busch, 72 Goold St., Bairnsdale.
VK3ACT—J. Cutts, 648 High St., Kew.
VK3AIV—N. O. Duncan, 13 Kenbry Rd., Heathmont.
VK3ANR—Geelong Radio and Electronics, Guild Hall, Myers St., Geelong.
VK3ZCN—A. F. Leversha, Harcourt.
VK4ZLL—L. Labruyere, 157 Warry St., Fortitude Valley.
VK4ZPW—W. Spring, St. Leo's College, St. Lucia.
VK4ZTT—T. C. Thompson, Boys' Grammar School, Rockhampton.
VK5FA—E. F. Brandon, C/o. Dpt. of Civil Aviation, Oodnadatta.
VK5UJ—J. S. Burns, 4 Arthur St., Whyalla.
VK5QM—M. W. Higgins, 15 Beta Cres., Panorama.
VK5ZBS—G. Downing, 4 Bella St., Gawler East.
VK5ZDA—D. M. J. Bates, 23 Alison Ave., Blackwood.
VK5ZJD—J. E. R. Dunkley, 54 Radstock St., Kilkenny.
VK5ZOF—G. C. Adams, 225 Shepherds Hill Rd., Eden Hills.
VK6ZEH—G. D. L. Armstrong, C/o. Station 6WA, Wagin.
VK6ZEM—B. M. McDonald, Station: Munthoola Farm, Williams; Postal: P.O. Box 47, Williams.
VK9BJ—B. J. Mennis, P.O. Box 61, Rabaul.
VK9PL—J. G. Porter, C/o. Eng. Branch, Posts and Telegraphs, Port Moresby.

R.S.G.B. 21-28 Mc. TELEPHONY CONTEST—DECEMBER 5-6, 1964

Radio Amateurs throughout the world are again invited to take part in the annual R.S.G.B. 21-28 Mc. Telephony Contest to be held this year on December 5-6.

Attention is drawn to changes in the scoring system described in detail in Rule 8. Contestants are advised that in previous years many points were lost by those who did not read this rule carefully.

Duration: The Contest will start at 0700 G.M.T. on Saturday, December 5, and end at 1900 G.M.T. on Sunday, December 6, 1964.

The Contest is open to licensed Amateurs in all parts of the world.

Contacts may be made using any telephony system for which the entrant is licensed. Only one contact on each band may be made with a specific station, whether fixed, portable, mobile or alternate address. Duplicate contacts must be logged and clearly marked as duplicates without claim of points.

Contest Exchanges: An exchange of RS reports followed by a three figure serial number starting with 001 for the first contact and increasing by one for each successive contact.

Entries: (a) should be clearly typed or written on **one side only** of foolscap or International A4 size paper; (b) must be ruled in columns head (in this order) (i) Date/Time (G.M.T.); (ii) Call Sign of Station Worked; (iii) I sent him; (iv) He sent me; (v) Band; (vi) Bonus Points; (vii) Points claimed; (c) must be addressed to the **Contests Committee, Radio Society of Great Britain, 28 Little Russell St., London, W.C.1, England,** the name of the Contest being clearly shown on the top left hand corner of the envelope, which must be postmarked not later than December 21, 1964.

Rule 8. **Scoring:** Overseas stations may only claim points for contacts with British Isles Stations (G, GB, GC, GD, GI, GM and GW). Overseas scoring will be as follows: Each completed contact with a British Isles station will score **5 points.** In addition, a bonus of **50 points** may be claimed for the first contact with each British Isles country-numeral prefix on each band. A further 50 bonus points will be scored for every ten stations worked in each of the above categories irrespective of band.

Certificates will be awarded to the leading station in each VK call area.

The usual cover sheet and declaration must accompany each log.

Phone 34-6539, write or call

WILLIAM **WILLIS** & Co. Pty. Ltd.

428 Elizabeth St., Melbourne

for **GELOSO**

Equipment and Components

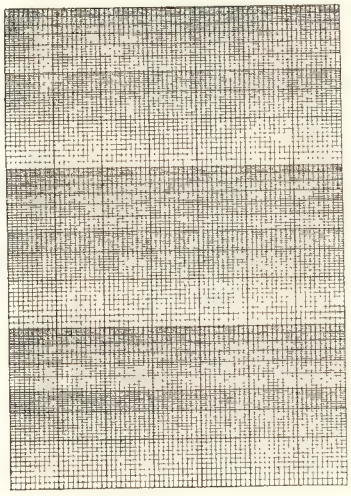

3 Cycle Semi Logarithm

GRAPH PAPERS

Consult:—

NORMAN BROS. PTY. LTD.

60 ELIZABETH ST., MELBOURNE

Phone 63-6221

Standard Linear Scales:
10" x 8" to 16" x 25" .... **2d.** to **6d.** sheet

Semi Logarithmic Scales:
1 to 6 Cycles .... **4d.** sheet

Double Logarithmic Scales:
1 to 3 Cycles .... **5d.** sheet

Polar Co-ordinate:
8" diameter .. .. **2d.** and **5d.** sheet
12" diameter .... **1/-** sheet
Smith's Chart .... **5d.** sheet

Power Emission Graph .... **4d.** sheet
Reactance Frequency Graph .... **4d.** sheet
Radio Rcvr. Performance Graph **4d.** sheet

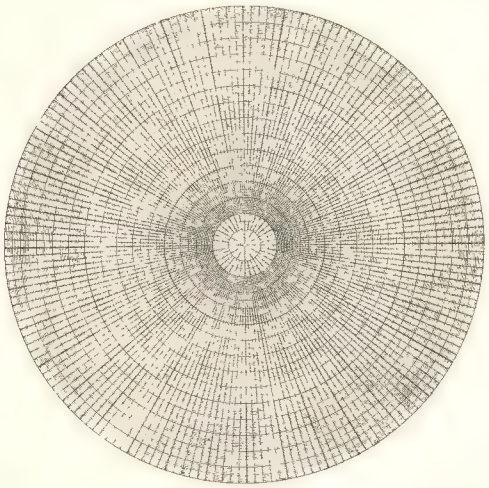

Polar Co-ordinate.

D X

VP4, OA4, BV, ZM7, 7GI, FP, AC5, MP4, ZC6, TY2

Sub-Editor: H. A. BEHENNA, VK5BB,
14 Stanley Street, Crystal Brook, South Aus.
ADDRESS CORRESPONDENCE FOR THIS PAGE DIRECT TO THE SUB-EDITOR

As we predicted last month the bands really have gone for the big change and 20 metres has gone for the complete reversal with regard to W and Europe, Asian and Russians areas. Whether these conditions will remain as of time of writing is hard to say, but inside two very short weeks the change is phenomenal. Times shown below are times of maximum sigs from each area, and is variable day to day.

160 Metres: The only report here is not actually the DX type, but Ray VK2HC will be pleased to hear that his sigs were being received at Rockhampton at 5/7-8 by Charles Thorpe, WIA-L4018.

80 Metres: Early mornings on c.w. at around 2200z some Europeans are workable, whilst in the early evenings approx. 1030z on the low end, JAs, etc., can be heard at reasonable strength. On the high end DX portion, VR2, ZL, etc., can be contacted on s.s.b.

40 Metres: Around 7.1 Mc. each day at approx. 0700z, G, GI, etc., are workable along with OA, YV, etc. An occasional ZS and ZE can be heard working but sigs are not strong from Africa. 0830z the band opens to the East for KH6 and the associated islands, plus W for a couple of hours. An hour or so later the islands to the north are there with good sigs. Most of the activity is for s.s.b.

20 Metres: Some contacts to Europe in the early hours local time, during the morning hours a.m. an occasional South American with Antarctica coming in strong. W, XE and VE stations have practically disappeared in the afternoons. 0700z sees some activity from Africa. 0800z sees KL7 area, whilst from 1200z the short path to Europe, Asia and Russian areas are really jumping. This continues most nights until about 1430z.

15 Metres: A little more activity especially during week-ends, but mostly North-South path around midday.

10 Metres: Garry is reported to have worked a couple of JA stations. How about we give these latter bands our attention soon? They are more usable than most would think, with a bit of activity here, it would be surprising what might happen.

ACTIVITIES

Just digressing for one short moment, might I say thanks to the boys on a.m. whom I worked on s.s.b. during the R.D. Contest. The co-operation of the two modes worked well, not one station I called refused to answer and the quick answers to each call was good to hear. I'm sure I speak for a lot of fellows in this regard.

Heard Stewart VK5MS calling and calling W7GNP for special reasons on 20, with no return, but who was there to answer the call, W6GNP. Ken always looks to VK after midnight W time for contacts he really enjoys.

TI3AA, Arnoz, is on week-ends 14120 kc. s.s.b. QSL to Box 4589, San Jose, Cr.

Charlie FO8BL on a.m. approx. 14100 kc. QSL to Box 45, Papeete, Tahiti.

A quick tune over 14 Mc. covering about 20 minutes revealed the following calls and all workable strength: CR7, 7Q7, KH6, HK3, FO8, TI3, JA1, KG6, KL7, KJ6, etc.

HK3AUE is on s.s.b. most Sundays 14100-14140 kc. QSL to Box 6070, Bogota, C.

David HR1RP looking for VK contacts at 0530z with excellent signals from HR at the moment.

ZS6NE, possibly the most consistent from his area, can be heard almost daily on the low end of 14 Mc. s.s.b.

KC4 stations are building up in strength but carry on a lot of phone patch work with the Ws.

Lots of weak carriers trying to break through on 15 metres during the daylight hours.

VR2EN heard in the DX portion of 80 mx chatting with ZL.

ZE1AYZ was also heard on approx. 7094 kc. at 0740z on s.s.b.

Joe operating 4U1ITU is a Scot who knows all the Adelaide and Elizabeth gang in VK5. Will be returning to Glasgow soon.

FB8WW still very active on 14 Mc. c.w. from 0500-1200z with a T7 note still.

VU2NR hopes to be portable in VU5 this month.

KS6BA and KS6BL can be heard on 14230-285 kc. at 0630 and 0830z.

LU1ZC and LU8ZI are on Deception Island on 14 Mc. c.w. about 1200 and 2200-2300z.

UA1CT is /UJ8 on 14108 kc. s.s.b.

GC2FMV is on 14020 kc. after 1200z.

FK8AB is on 7008 kc. c.w. after 1200z.

LA2BJ/P on Jan Mayen c.w. 14055 kc.

FO8BJ on 14110 kc. s.s.b. at 0600z.

KG6SB and KG6SZ are both on Saipan at the moment.

Heard Pete VK5FM working KC4USS/MM near the South Pole, aboard the Mills, which is heading on a round the world tour, while maritime the station is operated by WA2WAI whose home QTH is near Rhode Island. Once they get away from the base down south, they will revert to the operators home call plus MM.

YA1BW-1AN are both keen c.w. men and can be contacted on 20 from Afganistan around 1430z.

JA0BP is on s.s.b. and hails from Krasnojarsk, U.S.S.R., and is in Zone 18. Runs 200 watts to a quad antenna.

K4LSI and K4LIS are mother and son from the state of South Carolina.

EP2AO and EP2DM are active from Iran. Some times are heard around 1330z.

George VK5RX appears to be very jubilant over the change in conditions, the long path to W on both 40 and 20 mx being very good at his QTH.

OX3JV is old OZ7JV from Denmark, and now at Greenland using s.s.b. on 14 Mc.

SL6BH is the training centre of the Royal Swedish Air Force, and is operated by SM6-CKU. They are using a HX500 at 100w. with a hi-gain vertical and the hearing aid is an SX101A.

FH8CD is a good contact and a number of VKs have made contact on s.s.b. or c.w. Operator is Andre Lienard and is located at Domaine de Patsy, on the island of Anjouan, in the Comores group. His frequency is 14275 kc. on s.s.b. He uses an HX50 Tx, Drake 2B Rx, and a beam antenna. QSL direct or via the R.E.F. society in France.

HS1X is another on s.s.b. running 45 watts. He is Andy W1FAX and is with the U.S. Embassy in Bangkok, Thailand.

VS6FC, of Hong Kong, formerly G3LSW, puts in a good signal with 30w. and a dipole.

W2AOO is with the U.S. Army Engineers in Korea and is now using the call sign HL9TO.

9Q5HF is the Rev. Edward Schuit, located on the shores of Lake Albert, at Linga, in the African republic of Congo. He is up 7,000 ft. and two degrees off the equator. Uses a Viking Tx and a quad.

JAs most prominent in the Asian Contest were 1CG, 1BWA, 2CMD, 3FT, 5HD, 6AA, 7MN and 8JAM.

Some of the best cards received this month through the VK5 Bureau are as follows: FB-8XX, YV1AD, 5A1TW, SM2BCS, VE2WY, F8TV, F3ZU, UI8LB, KR6BQ, KH6OEF, VR2DK, UB-5KST, CR6DB, OA4PF, VQ8BM, EP2AV, 4X4MR, YO2CD, HC1DC, ZM7AD, ZS3HT, HB9MU, OK1WV, YO7DO, UA2KAE, UI8AG, UW0IF, UB5KBA.

Peter Drew, WIA-L6201, sends in a comprehensive report from the West and shows that most of the boys should be having some fun over there. Peter says he heard his first Ws on the long path on 80, both c.w. and s.s.b., some of the stations logged were W1IZY, K3EKO, K2BZT, W4IHK, W1CBV, VE3AWE, W2LV. The strongest was about an S5, these were heard from 2215-2300z. At the same time on c.w. DJ7FC, 5Z4IV, UO5GW and VQ2DT (who was S8-9). Other DX on 80 has been from 0930-1130z and is all s.s.b. as follows: KH6FIZ, VE3BWY, VE3BHQ, W0LEJ, W5KFD, K5FRG/5, W2BIQ, W1AWY, W1BU, W6BBH, VR2ES, WB6GZK, W4BUR, WA5EFL.

On 40 mx Peter says there are loads of Europeans and Africans between 1700-2300z, while Ws are very good at 2200-2400z and 0900-1300z. Occasionally G8PO or G3AOO get through but are very weak. Best on 40 c.w. is OR4VN, VE3BLU, 9Q5AB, FB8YY, ZS5QU, ZE1BF, UQ2KAA, YO5LP, VQ2DT, G3PEK, HB9AEO/P, while on s.s.b. 9Q5AB, SM6VR, OH2AM, G3AOO, WA7AJB, HK5AUG (0816), YV5BKW, XE2CW, VP6KL.

The best on 20 mx c.w.: FR7ZD, FB8WW (0625), OH4QG (1429), ZA1FL (1426), ZC5FS (1423), AC5CP, UH8KAA, 9M4LD, MP4BEQ (0659), UA2KAK (1317), VE2BCT (1151), UM-8AP, SM7QY (1652), UA1KAE (Mirny Base Ant., 0806).

On 15 mx: W6JRY very weak on a.m. at 0300. Tnx a lot, Peter.

Ken VK3TL reports the 20 mx band is really open to Africa during the afternoon from about 3 p.m. Vic. time. Ken has worked the following on s.s.b.: CR6GO, CR6GQ (a.m.), CR7GF, HC1EB, HC5NW, HR1RP, TI3AA, VQ2RB (a.m.), 9M4JW, ZC5AM, 7Q7GN. 20 mx c.w.: TF3AB, HM5CO, HP1MN, SP0RF, IT1PST, JT1KAA. Ken's best QSLs for the month: LX3MZ, WA4 JXV/VO2, AP2AP, CR7GF, AC7A, VR5AA, 5A3TX, ZS7R, FO8AQ, YN1LH, CX3AA, CX-1NE, CE3AA, TF3AB.

Some QTHs: SP0RF, via SP9RF. ZC5AM, Box 777, Singapore. 7Q7GN, Box 700, Blantyre, Malawi Republic. HR1RP, U.S. Army Mission, C/o. U.S. Embassy, Tegucigalpa, Hon. Many thanks Ken.

From George VK5GG, all on 20 mx s.s.b. and all short path: OE2EGL, G3IWV, IT1TAI, MP4BBW, G3WW, SV0WGG, 7Z3AB, DL5DR, G3AJX, DL8DX, OZ9SL, UA6XG, G3PCI, SM-2BJI, G8JM, SM5CSL, UA4CB, UW1OL, OX-3JJ, UM1MO, SM1AS, G2FSP, G3AOO, KC4CK, OA4J, VR2BC, YV5BKW, UA1CK, SM6AYC, XW8AX, LA8LF, OH6AF, F9UC/FC, ZS6N, ZE2JE, I1RB, CR7GF, ZS1J, ZS6N, UA8CAA, ZE6NE, ZE4JO, ZS6BO, ZS4PU, KR6OJ, G5FI, G3KOM, SM5CO, 9M2DQ, ZS4U, OZ8RA, DJ-8CB, UO0PK, IT1TAI, W, KL7, JA, etc., not listed. (It's taken a long time George, anyhow thanks, I'll come down and peak that quad for you, hi.)

Keep an eye open for "France" from the 14th November from Rodrigues under call of VQ8AMR, transmitting a.m. and s.s.b. in the 14 Mc. region.

SV0WGG: QSL to C/o. K1EAT.

Also happy with the change in DX conditions is Garry 5ZK, who reports working the following on 14 Mc. s.s.b.: VS6AJ (1130), HS1S (1145), OZ6OP (1230), 9M4JW (1330), 4U1ITU (1345), G3PCI (1345), UA4AR (1400), DJ8RR (1400), HC5NW (0400), 9M2DQ (1045), Ws 2-3 (1245), ZS4OI (0500), XW8AX (1230), OH6WY (1232), G8UG (1230), G3IWV (1230), MP4BEQ (1330), HS1BD (0930), ZC4GT (1000), VQ8AM (0815), 9M2LO (1130), G3EIN (1230), SM4AMP (1300), I1ZMJ (1300), G3SOC (1315), CT1IP (1330), ZS4JB (0500), XW8AL (1130). On 21 Mc. a.m. and s.s.b.: JA1-0, W5-6. 28 Mc. at 0300 JA3DEA, JA3CXN. Tnx Garry.

So that's it fellow Hams. Things are definitely looking better. Thanks to the following: Peter Drew, Garry 5ZK, George 5GG, George 5RX, Ken 3TL. See you next month. 73, Bert VK5BB.

W.I.A. D.X.C.C.

Listed below are the highest twelve members in each section. New members and those whose totals have been amended will also be shown.

PHONE

Call	Cer. No.	C'nt-ries	Call	Cer. No.	C'nt-ries
VK5MS	24	306	VK2JZ	61	217
VK6RU	2	303	VK6KW	4	211
VK5AB	45	301	VK3WL	14	211
VK6MK	43	293	VK3ATN	26	204
VK3AHO	51	289	VK4HR	12	192
VK4FJ	21	280	VK4RW	23	186

C.W.

Call	Cer. No.	C'nt-ries	Call	Cer. No.	C'nt-ries
VK3KB	10	326	VK6RU	18	260
VK3CX	26	304	VK3AHQ	79	248
VK2QL	5	301	VK3ARX	66	242
VK4FJ	29	296	VK3XB	75	238
VK3NC	19	286	VK2EO	2	234
VK2AGH	71	267	VK3YL	39	231

OPEN

Call	Cer. No.	C'nt-ries	Call	Cer. No.	C'nt-ries
VK6RU	8	309	VK3NC	77	287
VK4FJ	32	305	VK3HG	3	274
VK2ACX	6	300	VK3JA	43	252
VK2AGH	83	300	VK7LZ	23	242
VK6MK	74	295	VK2VN	18	235
VK3AHO	76	294	VK4HR	7	233

VHF

52 – 144 – 420 – 576 – 1296 Mc.

Sub-Editor: LEN POYNTER, VK3ZGP,
14 Esther Court, Fawkner, N.15, Victoria
ADDRESS CORRESPONDENCE FOR THIS PAGE DIRECT TO THE SUB-EDITOR

The following letter from John Lee, W6YKS, contains some interesting news from U.S.A. and is published herewith:

"I just received a copy of your Ham magazine, 'Amateur Radio,' and am glad to see that Hams in other places on the world have not given up on v.h.f. Also find it very interesting that you are using the u.h.f. frequencies. They are not in wide use here in the U.S.A., considering the number of Hams here.

"We also have the television problem on 50 Mc., but it isn't because the t.v. station is inside the Ham band. Our lowest channel is Channel 2 (54-60 Mc.).

"There are quite a few Hams on 50 and 144 Mc. all over the country. Now that the sunspot cycle has gone to a minimum, and band openings are few and far between, some of the Hams have gone to working tropo and meteor scatter for DX. The best time for this propagation seems to be early in the morning 0600 to 0900 local time, and the best path seems to be north and south. Distances of around 1000 miles are not uncommon for the high power stations. However, I only run 250 watts input with a single 4-125A (4D21), and have an eight element beam up about 40 feet. So far my best scatter DX is San Francisco (about 275 miles). Other stations work consistently distances such as from Los Angeles to San Francisco and from San Francisco to Seattle, and Portland, Oregon. On 'skip' openings, of course, you know what can be done.

"Well some day the sunspots will be back and maybe we will have a QSO on six. I will be there as I leave the six metre receiver on most all the time I am awake. Also, if you are interested, we have many antenna and rig designs available here and would be glad to share them with you. For now, good luck and DX."

John's address is P.O. Box 472, Fortuna, California.

As VK2 and VK5 notes have not been received for some time, would these Divisions please consider a new correspondent? 73, 3ZGP.

LATEST LIST OF V.H.F./U.H.F. RECORDS FOR AUSTRALIA

50 Mc.:—
VK3ALZ-XE1FU—1/5/59—8,418 miles.

144 Mc.:—
VK2ZKP-ZL1ADE and ZL1AUM—24/12/63—1,351 miles.

432 Mc.:—
VK3OB/3-VK3ZAV/3—19/1/64—97.3 miles.

576 Mc.:—
VK6ZDS/6-VK6LK/6—15/12/63—101.2 miles.

1215 Mc.:—
VK2ZAC-VK2ZCF/2—4/3/63—46.8 miles.

2300 Mc.:—
VK3XA-VK3ANW—18/2/50—9.0 miles.

3300 Mc.:—
VK3ZGT/VK3ZGK/3-VK3ZDQ/3—14/12/63—63.5 miles.

THE BEACON BOX

VK5VF—

6 Metres — 53.000 Mc.
2 Metres — 144.800 Mc.

One call on c.w. then carrier for 40 seconds, then repeat, etc. Operation is almost continuous.

VK6VF—

6 Metres — 52.006 Mc.
2 Metres — 145.060 Mc.

Automatic c.w. identification with approximately four seconds key-down position. Operation is almost continuous.

VK3: ATV0—

51.75 Mc. f.m.
0900 — 2300 hours daily.
(100kw. e.r.p., 2600 ft. elevation)

VICTORIA

This past month has seen a rise in activity on the bands as winter's long and cold nights are giving away to longer and warmer days. The advent of the warmer nights have given impetus to a return to the shacks. New call signs (and older) are appearing each week. There is an increase in the users of the net frequencies since the "Activities Day" on 13th Sept. in Victoria. The 53.032 a.m. net is receiving quite a lot of attention and some 40 odd stations have been logged on this channel. The f.m. net on 52.525 Mc. is slowly picking up. There is a small supply of 70 Mc. f.m. mobiles coming on the market here and they are being snapped up.

The really keen 6 mx enthusiasts are working on their gear, ridding themselves of Channel 0 problems. With luck quite a few of the regulars will be getting amongst the DX during the Ross Hull Contest. Other States should catch the Melbourne gang probably down the low end of the band during non-programme (test pattern) hours and then higher in the band during regular programme times. Approx. 3.30 p.m. onwards (except for special events) Channel 0 will be programming. Approx. 9 a.m. onwards is test pattern time.

From comments quite a few fortunate ones have no problems, however as the activity increases, no doubt so will the problems. Most of us will be using vertical polarisation to minimise possible problems.

Two metres is showing quite an increase in activity. The field day season will commence in October and take place on the third Sunday of each month except Feb. which will coincide with the National Field Day. Same rules as last year will apply. There promises to be more activity on this band this season.

432 Mc. has attracted quite a following with some 12 or so enthusiasts. Just recently a 136 mile two-way was made between 3ZER/P and 3OB/P. We trust the Amateurs concerned will make a claim for the record—anything to pass the distance?

1296 Mc. has interested a few here in Melbourne and I believe in Geelong. 3AUX has a really "hot" converter with cavities constructed from a well known brand of mustard tins. We gather the expression "not worth 2 bob" can't apply here also as we have seen the unit and can vouch for the fact that there is more than "2 bobs" worth of silver in it.

It is hoped soon to produce a "V.h.f. Newsletter" in VK3 and if our plans are realised we hope to keep more in touch with you per this media. Having seen both the VK2 and VK6 varieties, we have no illusions that it won't be hard work. Here's hoping for success. 73, 3ZGP.

VK3 52-54 Mc. stations and frequencies from the Melbourne area, supplied at the request of other VK Divisions: 52.02: 3ZNJ; 52.06: 3QO; 52.104: 3ZGP (fixed and mobile); 52.20: 3ZCO; 52.36: 3ZNJ; 52.37: 3ZIX; 52.525 f.m. net: 3BX, 3AAA, 3AAF, 3ZCK, 3ZDP, 3ZEL, 3EM; 52.58: 3ZCO; 52.65: 3ZDO; 52.66: 3ZPA; 53.00: 3WI stand-by freq.; 53.032 a.m. net: 3WI, 3BX, 3EM, 3KU, 3RN, 3UU, 3YS, 3ABP, 3ADF, 3AFJ, 3AFU, 3AHZ, 3AIJ, 3AKB, 3ALK, 3ALZ, 3ATP, 3AZT, 3ZBN, 3ZBR, 3ZCB, 3ZCE, 3ZCK, 3ZCM, 3ZCO, 3ZDC, 3ZEP, 3ZGD, 3ZGP, 3ZIY, 3ZJF, 3ZNJ, 3ZOL, 3ZOQ, 3ZPC, 3ZRH, 3ZSH; 53.14: 3ZGP; 53.32: 3ZPA; 53.40: 3ZCK; 53.72: 3ZCK, 3ZPB, 3AK, 3AEF, 3AFU, 3ZNM; 53.81: 3UU, 3ZCO; 53.82: 3ZML, 3ZPA; 53.84: 3ZGM; 53.86: 3ZCO. The following stations are v.f.o. or v.x.o. controlled: 3IM, 3UU, 3KC, 3AHL, 3ALZ, 3ASG, 3ZFC, 3ZHF, 3ZLC, 3ZOM.

Most of the stations in the above list are very active. The equipment used in the 53.032 Mc. net is mainly Pye Reports (Mk. I., II., III.) using respectively 6J6, KV04/7, and 3/12 finals, with inputs of 5, 12 and 15 watts. These units have car-to-car range of 5-10 miles in the city and up to 40 miles across country, but the freq. of the tx must be plus or minus 500 cycles. The rx's should be accurately tuned also. The antenna commonly used are quarter wave whips on mobile, ground plane, vertical beams, and coaxial antenna for home or base stations.

A few chaps have had t.v.i. problems. The main ones being front-end overload and oscillator harmonics getting into the i.f. strip. The first trouble is easily cured by fitting a 4 ft. length of 300 ohm feeder on the antenna terminal of the t.v. set and trim down until picture and sound are restored. The final length varies between 44 and 46 inches, depending on the length of feeder between the antenna terminal and the tuner. The harmonic trouble can be cured by fitting a series tuned trap in the grid of the multiplier stages in the transmitter. Tune the trap to the unwanted harmonic that is causing the trouble, which is usually between 30 and 40 megs. The same system works on 144 megs to prevent interference to Channel 5A.

V.h.f. Convention. The V.h.f. Group held their Convention on 10th and 11th October at Ferny Creek in the Dandenong Ranges, about 25 miles east of Melbourne. It was quite a success and it is planned to hold more in the years to come.

V.h.f. Group Meeting: The last two v.h.f. group meetings (which are held on the third Wednesday of each month) were given over to talks on f.m. with a display of some commercial equipment, which many VK3s have been converting to the local nets on 145.854 and 146 megs.

Two Metre Beacon: Planning is well under way for this beacon. It should be operating in the new year. The proposed frequency is 145.00 megs. The VK3 6 mx beacon on 51.75 megs. (ATV0 is of 20kw. e.r.p.) is f.m. and operates between 1100 hrs. and 2300 hrs. daily. The antenna has two nulls—one is in the Wagga Wagga direction, and the other in the Brisbane direction. Reports to hand show that is it very strong in some parts of New Zealand—to the effect that it blotted out their Channel 1 in Wellington a little while back. A local daily newspaper reports that the managing director of the station can watch Channel 0 at his holiday home in Hayman Island with an ordinary fringe area antenna and an unmodified commercially available t.v. rx. 73, 3ZCK.

QUEENSLAND

Signals which have been absent from the bands during winter are gradually beginning to re-appear with the approach of the summer months. It seems that some of us either undertake a re-building programme during winter or just plain hibernate. Bands have been continually active last month and many enjoyable contacts have been had.

A continuing stream of new voices have been heard on the bands. Lately it seems that many of the local low-banders have found that the very high frequencies are relatively free of noise and interference. Merv. 4MW, from Ipswich, has been working crossband, 6 to 80 mx, until he can become fully operational on 6 mx. Paul 4UL has been convinced that he should make a noise (Roy 4ZRM did the convincing). Even "gravel voice" Claude 4UX from up north was worked on 2 mx recently. With him was Charlie 4UC, who is heading the Youth Radio Scheme here in Queensland. Both these fellows spoke via the station of Bruce 4ZCM.

While not chasing sidebanders on 20 mx, Reg 4VX has been having plenty of discussion around his favourite subject of aerials on 6 mx. Low power mobiles are now a thing of the past as Reg runs 8 watts to his 6J6 with no melting tendency of the valve. Also I have heard that 4WF is going mobile on 52 megs.

George 4ZLG was quite astonished recently to hear a couple of low banders using fixed frequency f.m. well above 53 Mc. George wound his v.f.o. up to their frequency and broke in. They were most mystified when George's carrier caused a heterodyne but his modulation was completely removed by their limiters. However, contact was finally established and explanations followed.

With all this talk of full licence operators, I assure you that the Z calls are still active and have not as yet been overrun. Frank 4ZAS is using his new v.f.o. to best advantage and has just obtained an AR7. Frank has now retired from work and his voice is being heard more often on the bands now. Alf 4OL, who is better known as 4WI, has been on holidays and he was told before he left, "don't catch too many and save a lump of shark for Bill."

Tom 4ZAL made many calls during his recent holidays. He met quite a number of Hams down in Southport who are interested in v.h.f. John 4RZ, Bill 4WS, Arthur 4FE, Doug 4ZDL and Bob 4SR all send their 73 and will be pleased to meet any of the boys who venture down that way. Doug will be shifting his QTH to the Wondai area as he has been transferred.

Arthur did tell of his many efforts trying to make contact on 6 mx from Normanton to New Guinea when he was stationed up there. He used to call CQ VK9 quite a bit but could not break through. While on the subject of VK9, someone please tell Paul 9ZBV that he can come back and use his old call sign since they have decided to close down the office just down the tramline from his Brisbane QTH!

News from the Bundaberg district indicates that there are now four 6 mx stations in a nightly hook-up. It seems John 4ZMJ is thinking of a 50 ft. mast and Roy 4ZWR and Bill 4ZWS have been working on a tx and two super-regen. rx's for 2 mx.

The Ipswich Amateur Radio Club seems all set to appear on 6 mx. They intend to apply for a club call sign, but at the moment they will be using the call sign of Warren 4GT. Bill 4WD will be putting in a v.h.f. signal from Ipswich in the near future. Bill has accepted a position at the local b.c. station.

Victor 4ZBT has not been the best. He has had quite a stay in hospital and by the time this is published we hope that he has well and truly recovered. Lawrence 4ZLL has been heard using a taxiphone on 6 mx—welcome to the bands OM.

John 4ZWB in Dalby has been having a good time on 144 megs. While calling Bert 4CP in Toowoomba, he was called by 2WQ in Grafton. Not a bad effort for 250 miles on 2 mx! By the time the v.h.f'ers say congratulations to David 4ZEK for taking out the VK4 honours in the last Ross Hull Contest, it is just about time for the next Contest. Anyway, David well done.

I had words with Jim 4ZRA who hopes to be on the bands soon. Certain stations have already been using certain phonetics for his call sign, but these cannot be published or broadcast. What did you say about Rosy Apples Tom? Ross 4ZAT has been calling from Bribie Island on 144 megs. He was in doubt about the efficiency of his gear until someone heard him crying out in the wilderness.

If recently you heard the "Duke of Deagon" calling swing corners, promenade, ladies to the centre . . . do not think the worst had happened as it was only a dance in progress. The grape vine has been very active lately and along it came the news that local Hams of one of our northern towns are very busy with Amateur t.v. Further, who was the v.h.f. station liestening to 4OL mobile on 40 mx when he should have been up tuning 6 mx? I hope the Jamboree on the air v.h.f. wise was a big success. It should have been with all those stations operating. 73, 4ZPL.

WESTERN AUSTRALIA

The field day over 12th-13rd Sept. was a big success. Lance 6LR tried to reach a trig point 7 miles east of Bindoon but wound up in a field exercise being conducted by some branch of the services. He got the password eventually for he was on the air for the 1 a.m. session. He called several stations who never came back and would like you to swing the beam north next time. Ken 6ZBT had trouble with a 2k.v.a. motor alternator. Its big end and main disintegrated due to using wrong oil. Trevor 6ZCA had a squashed petrol tank due to bad road near his Dwellingup site. The winner looks like Ken 6ZBT with 12,430 points, followed by Charles 5LK 11,770 points. Andrew 6ZCW, in Bunbury, won the home station section with 7,725 points.

The fox hunt on 19th Sept. was won by Doug 6ZDW and Graham 6ZDB second by a matter of seconds. 6LR was bogged for two hours in a swamp nearby. He saw a red parking light on the next hill and gave her the gun. Only it was the wrong approach road and the swamp was a pretty good bunker. Roy 6ZBD managed to extract him after they found the aerial poking through the water. The fox was well hidden and quiet too, using a vibrator p.s. Just as well, for a goon mob had chosen the site for a beer-up, despite miles of surrounding bush in the South Riverton area. Each hound had a raucous welcome and needed some extra guidance as the tone had failed. Supper was at Bill 6ZBJ's residence. 73, 6ZAG.

☆

YOUTH RADIO CLUBS

There is a new aspect to our clubs which your members should find exciting. It concerns the Duke of Edinburgh's Award Scheme —a challenge to the young people of Australia to show what they are made of. It is not a competition against others, the challenge is a personal one for each boy or girl (between 14 and 19) to reach standards laid down in one activity from each of four groups, e.g. for boys, Rescue and Public Service, Expeditions, Pursuits and Projects, and Fitness. It is likely that our Y.R.S. certificates will be acceptable—some discussion has been started. Club leaders can get full information from their State Supervisors on this part, but the general conditions for other sections are laid down by the National Fitness Council. Club leaders who have members with wide interests and sufficient of what it takes to tackle all four sections should have a drive on this one. Who will be the first Y.R.S. member to be presented with the Duke of Edinburgh's medal by the Duke or the Governor-General?

Some items from VK2: Some details are now available about the latest schoolboy A.O.C.P., Paul Goldsbrough, of St. Edward's College, Gosford. Lee Kinsella, who started Paul on his Amateur Radio, writes that Paul passed full certificate but has to wait till next year to turn 16 before getting his licence. He did c.w. mainly with the VK2 Slow Morse session. but also had tapes from the Slow Morse stalwart organiser, Frank 2ACQ. Lee (2AXK), of Christian Brothers' College, Wollongong, at present has a booklet Y.R.S.I. (Administrative Details) which he is stencilling for club leaders, so you should send Lee a half-foolscap envelope (stamped with 8d.), print Y.R.S.I. in bottom left corner and include one 5d. stamp to help with expenses.

A nice budget of news from 4 Uncle Charlie. There are now 15 registered clubs. 4PE at Padua Coillege went on the air on 19th Sept. with Rupert 4ID in charge and local dignatories and club member Bob Stroud (operating) making contact with 4WI, 4PJ, (VK4 President), 4RP (Clontarf High), 4DS (De La Salle College), 2AIH (Inverell High) and Lee 2AXK at Wollongong. New clubs at Redcliffe High (run by teacher Ken Keith), Yeronga High (70 members and 3 teachers). Ipswich Amateur Radio Club has formed a strong and active Youth Section which meets on Friday nights at the QTH of Warren 4GT (the leader), has 22 members (10 to 16 years) with projects ranging from xtal set to 4-tube superhet. Office-bearers are Malcolm Rouse (Pres.), Peter Twining (Sec.), John Beattie (Treas.). Publicity in the Ipswich Press brought in 40 old radios. They aim to have a station licence next year.

Clontarf High is on the air three afternoons a week looking for contacts from 3.15 to 4. Claude 4UX is to address the October meeting of the Science Teachers' Association of Qld. on Y.R.S. organisation, display some gear, and operate a station. There is to be an article in above Association's newsletter and in the Qld. Teachers' Journal. Proserpine and Gladstone Scout Groups are very keen but stranded —no Amateurs in the area, not even somebody mildly interested in Radio, to help them!

News from VK3 is interesting and widespread. Blind Amateur Cyril 3AUM and Ron Everett, of A.P.I., are assisting with Royal Vic. Institute for the Blind at Burwood. Some of the standard radio symbols are being built out of wire on tinplate, and Cyril is arranging the Braille lettering. Robin Rowlands, of Scotch College, gives the news that Peter Garde should be on 6 mx by Sept. Rodney Tucker is already active on 2 mx and hopes to sit for the c.w. in October. Club at Korumburra reports members building wide range of projects including 2 and 6 mx rx, c.r.o., amplifiers, etc. New club at Strathmore High with instructor Mr. P. K. Alsop. Wilf Miles bearing the load at the Australian Postal Institute. Dave Buck and this club are great supporters of the Y.R.S. Boys at Bundoora received their first QSL from Division President of VK5, who also wrote a letter of encouragement.

Sunday, 13th Sept., was open day at the Christian Bros. Edmund Rice College, Bundoora. Harry 3EK installed a portable tx as part of the Y.R.C. display to demonstrate Amateur Radio in action to club members. The tx was loaded into a long wire antenna on 80 mx and the following VK stations were contacted: 3TL, 3AVK, 3DF, 3EO, 3VL and 3MO. Each of the boys had a turn at the mike and were impressed by the way a net was quickly formed out of one contact. Featured as part of the Y.R.C. display were the elementary certificates the boys had received recently, also equipment, books and tools, etc., owned by the club. The crystal sets and one-valve rx's built by the boys are part of the practical tests were also working. The display was a credit to the club who were able to fill a class room with items that created interest amongst the parents and other boys of the school. (Thanks for this info, Dave 3ZMX.)

I had a chat to Bob 5OD on the air recently and was glad to hear things are moving generally in VK5. I know time is needed to get things going so will be looking forward to the next few months in VK5, especially after the schools resume in February.

Would like to talk to more Y.R.S. stalwarts. I'm often operating VK1ACA (Canberra Radio Society) on 80 mx, Friday night about 8.30. If anybody cares to give me a call, will appreciate it. 73, Ken 1KM.

CRYSTAL PYE DIVISION

Manufacturers of Quartz Crystals for Frequency Control and Crystal Filters for highly selective circuits in the largest and most modern crystal plant in the southern hemisphere announce a new range of:—

CLOSE TOLERANCE GOLD PLATED CRYSTALS FOR AMATEUR APPLICATIONS

★ 1.8 Mc. to 15 Mc. ±0.005% in Style "D" (American HC6/U) Holders. ½" pin spacing. Amateur net **£2/10/0** plus tax.
★ 15 Mc. to 52 Mc. ±0.005% in Style "D" (American HC6/U) Holders. ½" pin spacing. Amateur net **£2/15/0** plus tax.
★ 100 Kc. ±0.005% in HC13/U Holders. ½" pin spacing.
1 Mc. 0.005% in Style "D" (American HC6/U) Holders. ½" pin spacing. Specially designed for Crystal Calibrator purposes. Amateur net **£4/0/0** plus tax.
★ 455 Kc. (nominal) Crystals for Filter applications in Style "D" or "E" (B7-G) Holders. Amateur net **£4/0/0** plus tax.

Many other types and tolerances are available from our standard production. Please consult us on your Crystal requirements.

PYE PROPRIETARY LIMITED
CRYSTAL DIVISION
CLARINDA ROAD, CLAYTON, VIC. P.O. BOX 105. PHONE 544-0361

This badge distinguishes the active member of the W.I.A. You can purchase it from your Divisional Secretary.

SWL

Sub-Editor: Chas. Aberneathy, WIA-L2211
30 Urunga Parade, Miranda, N.S.W.

TIT-BITS FROM TIM

In QSLing to a broadcast station even the scantiest information, like, "I heard your station, please send me a card," will nearly always receive a speedy return of anything from a card to all the printed matter under the sun. B.c. S.w.l'ing is easy as stations want your name to boost their known listening audiences.

The same is not the case when replying to an Amateur. A report like "I heard you working my neighbour last night, please send me a card" will not get very far. Your details must be good. They must be of some use to that Amateur. If the average S.w.l. has a return better than 5% of the number sent out, he is lucky. Cards cost money, so be on the ball with every relavent detail and your returns may improve.

I was sorry to hear that the VK7 group had disbanded through lack of support. If there are not enough members to keep the group going for meetings, how about someone keeping the issue of S.w.l. numbers alive?

Well yet another year is drawing to a close. Don't forget the Ross Hull V.h.f. Contest next month, a bit long, but worth supporting. Ross Hull was an Australian but spent much of his later life in America. A tireless worker with the A.R.R.L., "QST" and the Handbook and many activities both in and out of Amateur Radio. He met his untimely death by being electrocuted from the high voltage supply of a t.v. set on the night of 13th Sept., 1938.—Tim, L2052/2ZTM.

FREQUENCY AND WAVELENGTH
(Continued)

How engineers define the word frequency is by the number of complete waves or cycles of the particular signal which would pass a given point in one second, hence the term cycles per second.

But why talk about cycles-per-second when there are more convenient terms available? Remembering that 1,000 cycles is equal to 1 kilocycle, we can express the frequency of the wavelength quoted as 1,000 kc. per second or simply 1,000 kc. To take the abbreviation one step further, it can be expressed as 1 megacycle per second, or 1 Mc.

From all this we can derive a simple formula. To convert wavelength in metres to frequency in kilocycles, simply divide into a figure of 300,000. The formula works both ways, so that if you divide frequency into kc., into 300,000, the answer is wavelength in metres. Finally, one megacycle is equal to 1,000 kc., and that is equal in turn to 1,000,000 cycles.

For convenience of reference, the radio frequency spectrum is divided into bands. Of interest to the average experimenter are the medium and high frequency bands. These bands cover from 300 to 3,000 kc., and from 3,000 kc. to 30 Mc. respectively. The familiar broadcast band lies within the first mentioned and is from 500 kc. to 1,500 kc. The short wave band is really the high frequency band, the major International short wave stations collecting at various spots.

NEW SOUTH WALES

If the steady increase of members to our meetings continues, then our committee will be rewarded for their effort to revive interest over the past twelve months. It is certainly gratifying for the chaps who come along each month to see the new faces appearing, and we trust that they will continue to do so.

Ross L2290/2ZKB is busy excavating for the erection of his tower, which by now should be on the way up. Sorry that you missed the R.D. Contest, but holidays are important as well. OK on your new countries.

Ray L2287 sends word of having logged FB8, VR1, JA, KS6, KM6, KW6, YU, CR7, FU8, UA1, UW, and 9M2 with QSLs from YN1AH and VK0JQ. Nice going Ray.

Don L2022 was in Sydney during September, but owing to a mishap could not get along to our meeting. Sorry to have missed the chance to have met you OM.

Ray Bergmeir: I trust that my reply was to your satisfaction and the pamphlets were of some value. If I can be of help at any time just drop a letter to me.

Sid L2258 has had rx trouble, but is once again back in business. Many thanks for your continued assistance re this page, it has been much appreciated.

Mac L2/3074 has words with me once a week over the blower, and I would say that he is gradually getting back on the air. He sends his regards to all his mates down south.

VICTORIA

Eric L3042 is in direct contact with CO2BB (Cuba) by mail and can pass any S.w.l. reports to him at any time. He is sending all QSL cards for VK direct to him for distribution. A rare QSL received in the form of one from W6EYH/Mobile 9 because it is for a transmission using c.w., when on a vacation trip in his car. When Eric heard him he was near Chicago on his way home. Other QSLs to hand: CO2, FO8, KM6, KP4, KV4, MP4, UD6, UF6, UL7, UR2, VQ1, YN1, 4U1, etc. Plenty more, but have space trouble, sorry Eric.

Lloyd L3141: Sorry to hear that the wind played such havoc with your antenna, and also of your QRM problems. Thanks for the copy of the Long Island DX Bulletin, very good indeed. I shall return it at a later date.

From the Black Rock boy, Greg L3138, comes the usual compact letter which contains plenty of activity, plus the result of the V.F.L. final, hi. It's a pity they don't play the N.S.W. game down there. (Them's fighting words!—Editor.) Latest QSLs received: OZ9, UA0, UA9, ZS4, FO8, G3, VS1, MP4, YV5, etc., whilst heard covers quite a nice variety.

Drew Diamond, another keen lad who uses a home brew rx with a half wave dipole, up some 20 ft. That was a very impressive list of DX received. I was very pleased to hear from you.

Addison L3071 is a s.w.b.c. listener and sent quite a long list of stations received on those bands.

QUEENSLAND

From the Brisbane boatman, Lew L4020, comes a photo of one of his catches of some really big fish. Quite a handsome trio—the two fish and the angler, hi. Recent logs: JA, KW6, XE, W6s and Ks.

Charlie L4018 has sent me particulars of the Certificate Hunters' Club which I will include in the article on awards in the near future. Congrats on being the first S.w.l. Oceania member of the above club, and thanks for your nice remarks.

Thanks to A. Robson, of Rockhampton, and K. Reis, of Toowoomba, for their letters. I hope the printed matter was of interest.

SOUTH AUSTRALIA

Last month I was pleased to add another name to the L5 list. This month it is my pleasure to add yet one more, and trust as time goes by to add many more. A welcome to the page goes to Tim Corbin, L5067, who is hoping to gain a rung on the DX Ladder very soon. His first DX: KL7, HC1, ZE7, VR and Ws. Not a bad start OM.

Alan L5065: Congrats on gaining the L5 section of the N.F.D. Contest. I hope that good tally in the R.D. brings you another first. OK on getting ready for the v.h.f. season. I think you will like those bands.

Brenton L5069: I must apologise, as I have mislaid your letter and naturally cannot make any comments.

WESTERN AUSTRALIA

From the lone L6, Peter L6021, comes the usual interesting letter. This month Peter received 130 cards, in which were 14 new countries. This puts him in second place on the Ladder. Also to hand is the R.S.G.B. 21-28 Mc. award which he won in 1963, nice going OM.

Congratulations to L2242, L3138 and L5049 for their respective wins in the Ross Hull V.h.f. Contest, 1963-64.

That's it for this month, chaps. Cheers, thanks to Tim and the members who have helped to make this page possible. 73, L2211.

S.W.L. DX LADDER

	Countries Conf.	Countries Hrd.	Zones Conf.	W States
E. Trebilcock	284	293	40	50
P. Drew	136	241	34	30
D. Grantley	124	281	38	35
A. Westcott	93	159	31	11
M. Hilliard	90	241	33	14
M. Cox	84	232	30	21
G. Earl	69	150	31	7
C. Aberneathy ..	63	104	33	14
N. Harrison	56	172	31	37
L. James	51	144	24	10
I. Thomas	42	139	20	14
R. Beckley	27	50	19	—
A. Raftery	21	126	15	3
R. Oats	9	26	8	—

Publications Committee Reports . . .

The Publications Committee reports that all inwards Divisional notes, etc., received at P.O. Box 36, up to the evening of the 12th October have been published in this issue of "A.R."

In addition correspondence was received from VKs 9PL, 4NS, 3LK and 2YB, and Technical Articles came from VKs 1AU, 6DR, 5JT and 3ZEL.

A matter from VK2AVA was referred to the Victorian Division Council for decision regarding policy.

The Committee discussed the publication of a "History of Communication" from J. R. Cox and agreed it should appear in serial form in "A.R." as soon as possible. Proofs for the "Call Book" have been returned to the P.M.G. for authorisation to publish and it is anticipated that the new edition should be available late in November. As already explained, the late publication date was due to negotiations with the P.M.G. and next year the "Call Book" will be issued in June-July.

Mr. Bill Roper was welcomed to the Committee and will act as technical article reader and v.h.f. adviser.

The question of publishing the Christmas issues of "A.R." was discussed and the view of the holiday period shut-down at the printers the following will be publication and issue dates:—

DECEMBER 1964: Copy required by **8th November** for release on the 1st December.

JANUARY 1965: Copy required by **1st December** for release late December or early January 1965.

FEBRUARY 1965: Due to the fact that this issue will be set up during December 1964 for issue in mid February 1965, it will not be possible to publish any Divisional Notes, SWL, VHF, DX Notes, etc., nor any Hamads. This will apply ONLY to this issue. Accordingly, the February issue will be devoted to technical articles.

All readers are particularly requested to note the above changes in the issue of "A.R." for 1965.

Finance of "A.R." was discussed and it was agreed to maintain the current budget which may show a slight deficit for the year.

No "A.R." wrappers were returned from the October issue, hence the Committee can only conclude that all wrappers are correctly addressed. Members of the W.I.A. should notify their Divisional Secretary of any change of address. Direct subscribers should write to the Admin. Secretary, W.I.A., C/o. P.O. Box 36, East Melbourne, C.2. All licensed Amateurs must notify the P.M.G. of any change of the address of their transmitting station, in addition "A.R." should also be advised.

Correspondents are again advised that ALL matters pertaining to "A.R." should be addressed only to P.O. Box 36, East Melbourne, C.2, Vic.

☆

SUNSPOT ACTIVITY
(or lack of it)

We should all know that a "Zurich Sunspot Number" is an indication of the level of solar activity. We should also know that at present sunspot numbers are near rock-bottom, so as to speak—and because of such a situation, the ionospheric layers are far from dense, and m.u.f. for world-wide radio contacts are relatively low.

How many of you readers are aware that the Zurich Sunspot mean number (daily) for August 1958 was 200; for August 1961, 52; and for August 1964, 8? (Analyse it for yourself, try and recollect the 1958 feeling, or you newcomers imagine what it must have felt like in 1958!!)

The "experts" are now forecasting that December 1964 could well be the current sunspot minima month—after that there will be a slow climb back towards (we hope) the 1958 maximum level (and the good old DX days).

—Eric Trebilcock (WIA-L3042).

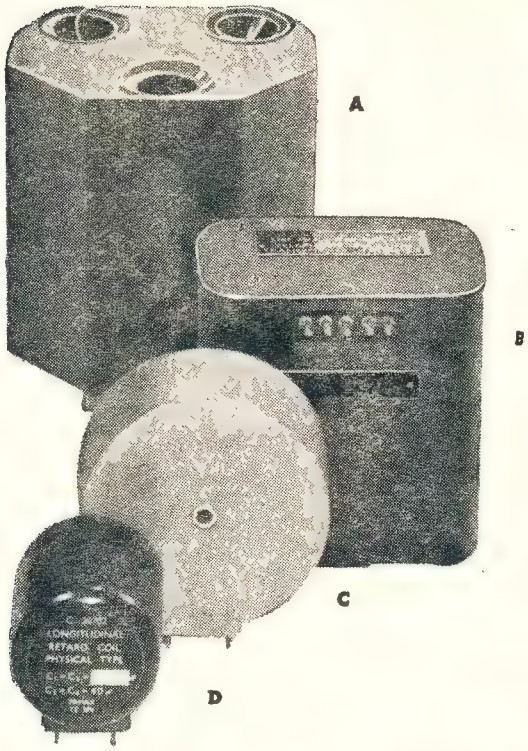

RESIN ENCAPSULATED TRANSFORMERS BY TRIMAX...

Designed for specific applications such as High Voltages, direct burial in the ground or other extreme environments! We've developed (and time proved) these construction techniques at "TRIMAX" using Epoxy resin for encapsulation! Leave your transformer problem to our skilled design team and we'll solve it! Illustrated at left
(A) Airport Runway Lighting Transformer..
(B) Telephone Isolation Transformer
(C) Telephone Drainage Coil.
(D) Telephone Longitudinal Retard Coil

L M ERICSSON PTY. LTD.
"TRIMAX" DIVISION
FACTORY: CNR. WILLIAMS RD. & CHARLES ST., NORTH COBURG, VICTORIA. 'PHONE: 35-1203 . . . TELEGRAPHIC ADDRESS: "TRIMAX" MELB.
TM38

FOSTER DYNAMIC MICROPHONES

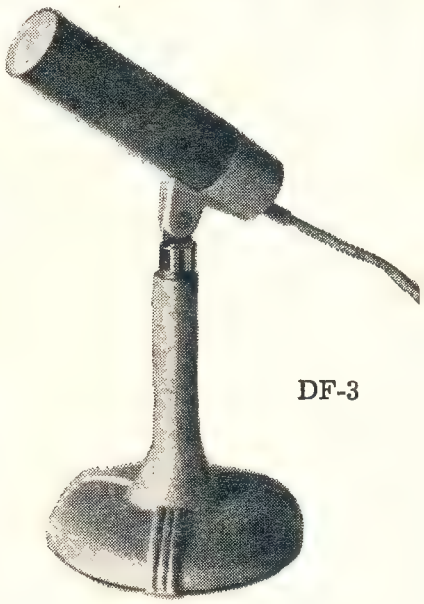

SPECIFICATIONS:

Output Impedance .... 50 ohms or 50K ohms
Effective output level .... —55 db. [0 db. = (one) 1V. Microbar]
Frequency response .... 50 to 15,000 c.p.s.

OMNI-DIRECTIONAL DYNAMIC:

Plastic Diaphragm.
Size: 4½" long, 1¼" diameter.
Cable: 12 ft. of P.V.C.
Swivel fits 5/8" 26 t.p.i. Stands.
Colour: TWO-TONE GREY.

Retail Price 50 ohms: £4/7/9 + Sales Tax 10/11
Retail Price 50K ohms: £4/10/0 + Sales Tax 11/3

A QUALITY PRODUCT FOR TAPE RECORDERS & P.A. USERS

Marketed by **ZEPHYR PRODUCTS PTY. LTD.**
58 HIGH STREET, GLEN IRIS, S.E.6, VICTORIA Phones: 25-1300, 25-4556

ZEPHYR

Manufacturers of Radio and Electrical Equipment and Components

Agents: D. K. Northover & Co.; Neil Muller Ltd.; Homecrafts (Tas.) P/L.; Jacoby, Mitchell & Co. P/L.; T. H. Martin P/L.

FEDERAL AND DIVISIONAL MONTHLY NEWS REPORTS

(SEND CORRESPONDENCE DIRECT TO DIVISIONAL REPORTER NAMED AT PARA. END)

FEDERAL

I.A.R.U. NEWS

Region II. Division

From 14th to 18th April, 1964, representatives from 16 I.A.R.U. Societies in Region II. met in Mexico City to form a Region II. Division of the I.A.R.U. A constitution patterned on that of Region I. was drawn up and an executive committee of six were appointed. Those appointed were:—

Chairman: Antonio Pita, XE1CCP.
Vice-Chairman: Italo Giammattei, YS1IM.
Secretary: Gustavo Teusens, OA4AV.
Treasurer: Noel Eaton, VE3CJ.
Member: Miguel Czysch, LU3DCA.
Member: Robert Denniston, W0NWX.

The new division looks forward to receiving further membership from countries not represented at the inaugural meeting.

U.S.A. Reciprocal Operating Privileges

On 28th May, 1964, President Johnson signed a bill on reciprocal operating for Amateurs to eventually make it possible for foreign Amateurs to apply for operating privileges in the U.S. When permission is granted, the foreign Amateur will be able to use his own call sign with an appropriate portable suffix. The A.R.R.L. hopes that Societies interested in this participation will approach their administrations to obtain this agreement with the U.S. State Department.

U.K. Licence Structure

The R.S.G.B. has announced that as from 1st June, 1964, a revised licence structure has been instituted. Existing licences will be replaced over the next year. The new structure includes the Amateur A, Amateur B, Amateur Mobile, and Amateur T.V. licences. Amateur A is the general licence, and Amateur B is a phone only licence restricted to operation above 420 Mc. with call letters beginning with G8 and three letter suffix. Amateur T.V. licences will be assigned G6 three letter calls followed by /T. Stations operating from a temporary location will now be able to use the prefix of the G country they are in followed by the call letters and /P. Log times are to be kept in G.M.T., while the frequency used, rather than the Amateur band, will also be required. As from this date, the 70 Mc. band will be extended to 70.1-70.7 Mc.

Newly Developing Countries

The following is in part the text of a letter from an official of one of the newer countries. This official is also a licensed Amateur:

"American Amateurs do indeed have a large responsibility for the future of Amateur Radio by virtue of their numbers and by the standards they set. In the developing countries, however, it is relatively easier for the local Amateur to maintain contact with the licensing authorities and to enhance (or damage) our image with them. A very great responsibility must therefore rest with those few Amateurs in DX locations. Most countries would like the world to know more about them; hence the desire for short-wave broadcasting. Our job is to convince the right people that 100 Amateurs at 100 watts each are worth more than one 10kw. broadcast station! The way I see it, we need more publicity directed towards telecommunications authorities in the newer countries. Could we not emulate the practice of commercial companies by sending complimentary copies of 'QST' to many administrations?"

The above includes many words of wisdom with which we heartily concur.

Retirement of G6CL

After 32 years as secretary-general of the R.S.G.B., John Clarricoats (G6CL), retired last December 31. Clarry was one of the leading lights in the founding of the Region I. Division of the I.A.R.U. and has consented to continue as secretary of its Executive Committee. We in the W.I.A. add our felicitations to those of the I.A.R.U. in wishing him a happy retirement and satisfaction that his vast experience is not to be lost to world-wide Radio Amateur affairs.

Commemorative Stamp

The A.R.R.L. in celebrating its 50th anniversary this year is fortunate in highlighting the occasion by the approval of the U.S. Department for a request for the issue of a postage stamp honoring Radio Amateurs. For those philatelists who are interested, October was the month for issue.

New Union Members

The W.I.A. takes pleasure in welcoming the Jamaica Amateur Radio Association (J.A.R.A.), the Radio Amateur Association of Greece (R.A.A.G.), and the Radio Society of Ceylon (R.S.C.) as new members of the I.A.R.U. Calendar 68 also announces proposals for the Amateur Radio Society of Barbados (A.R.S.B.) and the China Radio Association (C.R.A.) to become members. The W.I.A. has voted in favour of the A.R.S.B., but nay in the case of the C.R.A., as in this case all of the qualifications for membership have not been met, the main point being that of 1,500 members of the C.R.A. only one is a licensed Amateur. It should also be noted that the old Association des Amateurs-Emetteurs du Maroc (A.A.E.M.) has changed its name to the Association Royale des Amateurs Emetteurs du Maroc (A.R.A.E.M.).

Amateur Band Intruders

In most I.A.R.U. Calendars are listed intruding stations into Amateur bands, as logged on a number of occasions by the International Frequency Registration Board of the I.T.U. which has 93 different monitoring stations located throughout the various sovereign nations. In the last Calendar a number of Russian stations were listed, but particularly two on 7060 and 7035 kc. The secretary of the Radio Sports Federation (R.S.F.), the Russian I.A.R.U. Society, has informed the hqdrs. that his government denies operation of any stations in the Amateur bands. We offer no comment on the above statement, but invite members who have the time to report any infringements of this nature through their Divisions. Forms should be available for reporting from your Division.

FEDERAL EXECUTIVE, 1964-65

The following Federal Executive Officers were appointed by Federal Council and notified on 31st July, 1964:—

Major Bill Mitchell, VK3UM, Fed. President.
Maxwell G. Hull, VK3ZS, Fed. Vice-Pres.
Jay Lancaster, VK3JL, Fed. Secretary.
Robert Boase, VK3NI, Fed. Treasurer.
David Rankin, VK3QV, Fed. Activ. Mngr.
Alf Seedsman, VK3IE, Fed. Business Mngr.
Arthur Tinkler, VK3ZV, Fed. Com. Mngr.

The following co-opted officers of Federal Executive have been appointed for the tasks shown:—

Ray Jones, VK3RJ, QSL Officer.
Alf Kissick, VK3KB, Awards Officer.
Tom Straughair, VK3ABV, Project Officer.
George Glover, VK3AG, Historical Officer.
Lionel Sharp, VK4NS, Contest Officer.
Rex Black, VK2YA, Youth Radio Club Offic.

— . . . —

NEW SOUTH WALES

HUNTER BRANCH

And so the Hunter Branch Convention is past. What a successful Convention this was. For the first time in many years, the customary "all male" dinner took a new face—indeed a new dignity—when we were favoured with the pleasant company of the ladies. And from all reports the ladies enjoyed it too. So why not make this a regular feature of our annual event? It certainly was the formula for success this year. All told, there were 80 members and guests at this most pleasant evening and, following the more formal speeches delivered by Lionel 2CS, Pierce 2APQ and Keith 2AKX, another Keith, 2ZAU this time, of the staff of Radio and Hobbies, gave us an interesting insight into the future. Keith called this his "Crystal Ball Night" and he chose to describe three pieces of equipment which will be featured soon in the magazine. Stuart 2AYF proposed a vote of thanks to Keith at the conclusion of the evening. Meanwhile, Frank 2APO kept things rolling at the top table. I have not quite forgiven him yet, and those who were there will know what all that is about.

To begin at the beginning is always a wise move and so I should report first the activities of the constructional competition. This was the best patronised competition we have ever had. The following were the constructors, in order of appearance: Les 2RJ, a two metre sniffer; Mac 2ZMO, a two mx tx for the table top; Des 2ZDN, two transceivers using transistors; Ian O'Toole, a low frequency rx; Bill 2ZWM, a 6 mx tx; Bill 2ZCV, a 2 mx transceiver, and Bob 2ASZ (visitor from Sydney), an s.s.b. transceiver. As can be imagined, deciding the eventual winner was a difficult task indeed with such an array of first class gear. So difficult, that members were asked to vote on the item of their choice so as to assist the committee. Des 2ZDN was pronounced the winner at the prize giving ceremony the next day and his trophy, a c.r.t. donated by Philips, was a fitting prize for such a good effort.

At first the day looked like being a real beam reducer with winds of 40 m.p.h. or so on the morning of the Field Day, but things calmed down and the final judgment was "a good time was had".

The scramble was won by Dave 2AWZ with the ether crusher while the early 2 mx hunt, only other event of the morning, was a victory for Harold 2AHA. In the afternoon, things really did an about face when the Susan 2BSB-Allen Legge-Ray Elkin team, using a transistor portable, came in first in the 7 meg. hunt. To say that the rig was carefully and cunningly concealed would be boasting I suppose, but it sure was wet in the water! I am led to believe that Susan's car is available for scrap at the call book address. Oh those wicked foxes. They choose the nastiest roads. In the afternoon 2 mx hunt, known as the Strongarm 500, first in was Harold 2AAH in 14 minutes! Remarks as to vehicle availability as above.

For those wishing to remain on the ground, there were two quizzers. The both were taken off by the Mullen household, Tony winning the technical section in a play off with Max 2MP, with Marcia being the best in the ladies' section. And to cap it all, Tony also had been presented with the V.h.f. R.D. prize the night before! Watch him lads! Best performance of the day went to Harold 2AAH and even the lady visitors were well catered for, Mrs. Pierce 2APQ being the holder of the lucky number. As for the lucky gent, it was, or is at the present, me, for I have the prize of two 807s for the holder of ticket F52. Please come and claim them—they are so tempting.

In addition to all the festivities there were some items of gear to be seen and heard as well. Arie 2AVA had some very compact equipment for the ducktalkers. A top band link was established between the hall and the Westlakes Club and some clown in a beaten

CLOSING DATES FOR COPY

DECEMBER 1964 ISSUE:
8th NOVEMBER, 1964

JANUARY 1965 ISSUE:
1st DECEMBER, 1964

FEBRUARY 1965 ISSUE:
NO NOTES, etc. See Page 15 (Publications Committee Reports)

up Fiat supported under a monstrous whip did some mobile working on this band. You won't believe it, but Frank says it'll be even better next year.

Thanks to all who helped, especially Kevin, Norm, Chris, Bill, Varley and any others I've missed—you're the chaps who made it what it was.

It seems that that little bit has taken up all the space that Hon. Editor will allow, so it remains only for me to say that you **must not** miss the next meeting. November 6 is the date, and the place is room 6 in the classroom block at the Tighes Hill Tech. We are to be treated to an unusual and most revealing lecture on Microminiaturisation, to be given by Col. H. J. Trick, head of the Military Products Division of A.W.A. He is bringing some new equipment to show the boys and this will be the first showing to the public in Australia we are told. So don't miss it, whatever you do. We start at 8 p.m.

I'm a bit unhappy really. All these lucky chaps on holidays, Bill 2XT in Japan, Lionel 2CS here, there and everywhere, and—no I promised I wouldn't say the other one. Still I suppose there are compensations, I'll not miss the meeting. By the way, did you know that our Arie has a new name—you ask him. And that two of our members are waiting for a long letter in the affirmative from the examinations branch. Best of luck chaps. 73, 2AKX.

— • • • —

VICTORIA

WESTERN ZONE

Quite a nice gathering took place in Nhill on Sunday, 27th September, when we held our Annual Convention. About 30 members and their families braved the rather wintry conditions. We were sorry that because of bad flying weather the flying group of the South Western Zone were unable to be with us. However will order a day to suit next year, Don, XYL and party.

Officers elected for following year were: President, J. W. Edmonds, 3AFU; Vice-Presidents, W. A. D. Giles, 3ADS; W. K. Semmler, 3ATS; Sec. and Treas., W. J. Kinsella, 3AKW, re-elected. A special committee was formed to organise W.I.C.E.N. activities. They are 3AFU (Clear Lake), 3AKW (Lubeck), 3ADS (Glenorchy), 3AOS (Telangatuk), 3ATN (Birchip).

The s.s.b. chappies seem to be the most active DXers. Harry 3ZX is now testing out a super quad with encouraging results. Ex-local, Chas. VR1B, at present in the Gilbert Islands, is heard quite often on the DX bands and I believe will be back this way towards the end of next year. Merv. 3AFO and family have just returned after their holidays which they spent touring Mildura and Canberra areas. 73, 3AKW.

— • • • —

QUEENSLAND

Last month things were very quiet on the home front news wise. Therefore I think it is about time that I declare this advertisement month. If you are intrigued, then the following is aimed at those who are unable to make the Sunday morning news broadcast from 4WI.

With all the talk of Queensland's progress, it is necessary that this Division progresses also. The VK4 Division does not intend to stand still however. With this in mind, we solicit all interested persons to join our ranks. If someone comes to your QTH inquiring about Amateur Radio, then invite him to become a member of the W.I.A.

You may wonder why news of your particular district does not come over 4WI and maybe you think we are biased about your locality. This is not so. The only reason why we do not put your district's news on the air is that no one in your area can be bothered to send any news to us for broadcast. We welcome news, both personal and general, about the doings of Amateurs, Clubs, etc., from all parts of the State.

Therefore all clubs take note! Get your public relations officer to send us the news from your club. In fact, anyone is welcome to put any news on paper and send it to Box 638J, G.P.O., Brisbane. It will be broadcast.

It was inadvertently stated in the September edition of "A.R." that the call sign 4WQ belongs to the Bundaberg Amateur Radio Club. I am sorry if the statement misled anyone. The sentence should have read that 4WQ is the official call sign of the Wireless Institute of Australia, "Wide Bay and Burnett Branch" and that the station is situated at the club rooms of the Bundaberg Amateur Radio Club. I hope things are correct now. Anyway, has the station been heard yet? Notes from Wide Bay give it no mention this month.

Now for a pat on the back! During the last six months, something like fifty thousand words of news have been broadcast over 4WI. Fairly obviously, Queensland Amateurs have been active, but there is always the feeling of some that the bands could be used even more.

Well I hope you didn't mind those direct broadsides, but they have to be said every now and then if this Division is to keep to its policy of progress.

YOUTH RADIO CLUBS

Discussions with a number of science teachers during a vacation school at the University of Queensland allowed a lot of publicity to be given to the Youth Radio Scheme. It seems that the Pomona Rural School, under the guidance of Garth Baker, will form a club. Harry Mitcham, of the Mount Isa High, is keen and Ken Keith from Redcliffe High is at long last getting into the picture. Other possibilities that we have heard of include Yeronga State High, Gympie Christian Brothers, and a G.P.S. School, Gregory Terrace.

Cairns High is going along very quietly and it is being said that they are going to come on with a few hundred watts of s.s.b.—what say you Alex? Big news of the month is 4PE, Padua College. They made their first contact with 4WI during last month and then they worked the other two licensed youth radio clubs, 4RP and 4DS. At the time of writing, a Y.R.S. morse contest was in view. Club champions from the schools will probably compete against one another to find the VK4 champion. Both under 15 and over 15 divisions will be contested.

Specimen papers for junior certificates are in the process of duplication and Harry 4ZHG should have puzzled the lads in Gympie with them by now. A completely new set of conditions for the elementary and other awards has also arrived. Before leaving this subject, we wish to state in print that the VK4 Division is very lucky indeed to have a youth radio organiser such as Charlie 4UC. He has applied himself wholeheartedly to the job of interesting schools in the scheme and the results he has achieved in such a short time are truly astounding. Keep up the good work Charlie. It is hoped that by this time next year, your list of clubs will have increased fourfold at least.

Perhaps if our hopes are realised we will no longer be discussing the s.w.r. of the feeder but rather the covalent or coionic bonding mechanism exhibited by ammonium bi-fluoride.

GENERAL NEWS

Recently Alf 4OL, who is the voice behind 4WI, took his annual holidays. The transmissions on Sunday mornings were made from a number of stations during the time Alf was away. We wish to thank these stations for making themselves available and we hope that the news was heard at your QTH at its usual strength. Alf has taken on a new job and this should allow him to be around at night for a change. He will probably be able to attend the monthly meetings since he will now be working during the daylight hours and not at night as previously.

Technical difficulties were experienced with the production of "QTC" for September. This is another way of saying that the typewriter for the cutting of the stencils refused to operate satisfactorily. As the production of "QTC" is a voluntary effort, some delay was inevitable.

The September general meeting was not well attended due to the fact that "QTC' had not been published. Even the lecturer for the evening did not arrive. Impromptu lecturers were drawn from the body of the meeting. Paul Rodukoff talked about his experiments with Q multipliers and then Jim 4PR gave an interesting discussion on transformerless power supplies. Paul again arose and warned of the hazards of using such a design. Claude 4UX was present at the meeting and gave details of activity of the northern boys. 73, 4ZBD.

— • • • —

SOUTH AUSTRALIA

The monthly general meeting of the VK5 Division for September was held as usual in the club rooms to a well-below average gathering of members and visitors, with the lecturer for the night being Rob 5RG and the subject, "Spurious Radiations". Rob had been called upon at very short notice to fill in for the night, but came along armed with copious notes on the subject plus a wealth of practical knowledge gained in the field and at various locations and call signs. Fortunately for me, he started off almost immediately with chalk and blackboard, naturally letting me out of any further cover of the lecture, for which I thank him sincerely. All that I can say is that judging by the rapt attention of those present, and the nature of the questions asked at the end of his talk, he achieved his object, that of giving us all something to think about, and also perhaps to make it possible for Amateurs to live with nearby fellow Amateurs in peace and contentment and thus open up larger segments of the bands for operation by these same nearby Amateurs.

The vote of thanks to the lecturer was ably, and somewhat humorously, given by Gilbert 5GX, and the applause was again sufficient indication of the good job performed by Rob.

For some strange reason, known only to the powers that be, the meeting was closed at the conclusion of smoke-oh without any of the usual business side of the meeting being held, either Federal or General, despite the vocal objections of grumpy old Parsons 5PS, who was amiably disposed of by the President (Phil 5NN), apparently to the secret enjoyment and satisfaction of all present. Anyway, I should care, at least I got it into the minutes. I think.

Noticed the Rev. White, from the Central Methodist Mission, present at the meeting as a visitor. Also noted that he was enrolled as an associate member later on. I checked up with him during smoke-oh as to his reasons for joining so late in life. He told me that he is now somewhat semi-retired and has taken up the threads of short wave listening, a hobby that he has always wished to participate in but up till now has never had the time to fully enjoy. He is to be congratulated on his decision, and who knows, one day in the future he might have his own call sign although when I suggested this to him he modestly thought not.

Understand that Joe 5JT is playing around with reduced size antennae, with particular emphasis on 7 Mc. He is still getting around on a stick, but is as lively as a cricket, although the first to admit that he never should have climbed up that beam at his age. Nice to hear about you Joe.

Also heard that Pat 5KM, from Victor Harbour, is interested in the Swiss Quad, the

HAMS! AT LAST!
Available in Australia
THE FAMOUS
PENETROX 'A'
ALUMINIUM CORROSION INHIBITOR
Price 10/- post paid
Seals indefinitely against the oxidising and corroding effects of air and moisture whilst maintaining electrical conductivity.
WILLIAM WILLIS & Co. Pty. Ltd.
Manufacturers and Importers
428 ELIZABETH ST., MELBOURNE

TECHNICAL ARTICLES

Readers are requested to submit articles for publication in "A.R.," in particular constructional articles, photographs of stations and gear, together with articles suitable for beginners, are required.

nature of which I am in complete ignorance. Swiss cheese by all means, but Swiss Quads, well I ask you?

Gilbert 5GX brazenly admitted at the meeting that he had recently attended a lecture at the Police Barracks, due, as he cheekily put it, to a misunderstanding with the Police radar. Take yourself in hand Gilbert, what with eating double ice creams in the main street of Kingscote and now in the clutches of the coppers, you are becoming a little devil!

Latest reports from the southern suburbs tell of Leith 5LG running amuck with a lawn mower in the back garden the other day and cutting up his beam control cable. Heard him telling Uncle Tom (5TL) of the incident on the air and also hoping that Pansy would not be listening in. Well I was, see, and I did not have any cotton wool in my ears like all of your neighbours did, ten seconds after the beam cable finished in the grass catcher. Tut-tut!!

George 5GG, Garry 5ZK and Gilbert 5GX heard cutting themselves a piece of the DX that bobbed up on twenty recently. Gilbert got 20 over 9 from Liverpool in one contact, but I think it was unnecessary of him to point out to me, with an obvious leer, that all three were on s.s.b. Pooh to you!!

With all this talk of DX on 20 mx around, I was somewhat taken aback to hear George 5RX say that he had not been doing much on the air as he had been gardening of late. DX around and George gardening. This I have to see!

In my long association with Amateur Radio as a hobby I have had a number of disappointments, such as, when they took my coherer away from me, when they made me give up loop phone, when they made me put filters in my power supply, to name a few. These little upsets of course I managed to take in my stride, but last month fate dealt me a blow below the belt, or should I say below where my belt should have been, to wit the discovery that in VK5 we are sheltering a renegade, yes sir, a deserter to the cause. I could hardly believe my eyes. There it was in black and white, the Western Zone sub-editor, none other than Barry 5YB, and to cap it all, having a shot at me to boot. To think this could happen to me, a VK5 writing for the VK3s, and from all appearances enjoying it too! Just goes to show to what lengths they will go to upend me. Oh woe is me!!!

Talking of other Divisional sub-editors, and who in the world would want to talk of other sub-editors? I notice upon reading the VK4 general news, that there is an "anonymous me" who just puts the news into some readable form and Bill 4ZBD just signs his name. Well, how would you be? Don't some people get it easy, no wonder they can't grow a straight banana up there!

Received a welcome letter from my espionage agent in the South East, unfortunately a little late for last month's notes, but still welcome news all the same. In it he tells me that the most notable achievement of recent date is that they had a 100 per cent. participation from the full licence members in Mt. Gambier for the R.D. Contest. Leo 5GJ and John 5JA blew the dust off their gear and worked 10 stations each, and Claude 5CH, Erg 5KU, Stuart 5MS and Col 5CJ also participated to help increase the score for VK5. There was also an entry in the v.h.f. side of the game, Col 5ZKR managed to work five stations on 52 Megs and above, and finished up with 55 points for the five contacts. My spy thinks that this is probably the first time that this has happened. Any doubters? He also tells me that the 80 mx broadcasts from 5WI continue to be 5/9 in Mount Gambier.

Arriving home from toil the other Saturday evening, I had just turned the corner when I noticed, with some trepidation, a somewhat familiar motor car with a Victorian number plate. Now the sight of a Victorian number plate at any time is enough to give me an attack of the trembles, but this car seemed too familiar for even an attack of the trembles to be enough to meet the situation. Sure enough, when I lifted the flap of the tent, who should be sitting on my best and most comfortable packing case, none other than the new Assistant Editor of "A.R.," that purveyor of malicious gossip concerning me in the magazine, that insulter—that—that—oh what's the use, it never gets me anywhere, none other than Ken 3AFJ. Working on the old Arabian proverb that it is better to kiss the hand that one cannot bite, I greeted him with some reserve, after turning down the hurricane lamp (it took me a week or so to remove the black smoke marks from the glass—what's wrong with these VK3s, don't they ever practise economy?), anyway, as I said, I greeted him with some reserve, and we finished up having quite a long talk on matters radio, whilst he spilt salt at our table. He was off next day to Port Augusta, and was to return to Adelaide on the Monday, and promised to spill some more salt at our table on that day. I have not heard or seen anything of him since that date and can only assume, and hope, that my smoke signals to the chief of the See Humpty Wah tribe, camped just outside of Port Augusta were received loud and clear and if so, then no longer will I have to bother about kissing hands that I cannot bite. Did he get back home Joan?

The Woomera Amateur Radio Club recently held its 10th annual general meeting to a very representative gathering of members, and the following officers were elected: President, J. Mount, 5EV; Secretary, D. Avard, 5OF; Treasurer, J. Pepper; Council members, Ian Hunt, 5QX; and T. Mitchell, 5TH. The QSL Manager is G. Albeck. Technical Officer is B. Wheeler, 5BV and last but by no means least, the Publicity Officer is T. Mitchell, 5TH.

It goes without saying that due to the floating population aspect of Woomera, the turnover of members is fairly high, but the average membership is around the 20 mark. They have a get-together on most Friday evenings at the club rooms at which experience (and enjoyment) is gained by the non-licensed members in the art of radio operating, plus plenty of discussion centred on the techniques of Amateur Radio, etc.

The club has appointed the licensed members to a roster system for the monitoring of the Sunday morning broadcasts of 5WI, and also for call-backs when 5WC will be kept on the air until lunch time, and naturally contacts will be appreciated from all directions of the compass.

It will be seen from this brief report that Friday and Sunday constitute the bulk of the club activities on the air, and the licensed members will choose other times for their serious DX activity. Keep your ears open for 5WC and give the boys the chance of a contact with the outside world, also the chance for the beginners to see just what makes Amateur Radio tick. Thanks for the notes Trevor 5TH, they are always welcome and who knows, you may well qualify for one of those mythical noughts that are reputed to be thrown about with reckless abandon by the Publications Committee.

Bumped into Norm Coltman the other day. After picking myself up, I could not but observe just how well he is looking. He has had a little gland trouble over the past year or so, which has somewhat slowed him down, but with a little dieting, plenty of attention from the XYL, to say nothing of a little slowing down in the activities in the direction of the North East, and all is now well. He still flatters me—his closing remarks as we parted were: "I was reading your notes in the magazine and I fell asleep before I could finish them!" Thank you for those kind words, Sir.

Joe 5JO called in the other day and left a letter for my perusal that he had received from Bob 5PU, who is at the moment in America, and from all appearances, thoroughly enjoying himself. At the moment of writing he and his family had just returned from a motoring trip to Toronto, Canada, but somewhat sadly reports that he did not see one Ham antenna, mainly due to there being so many t.v. antennae in the sky that he could not see the trees for the woods, or something like that! However, all was not lost, because he did see plenty of cars on the highways with halos and whips, complete with call signs for number plates, although none of them seemed to stop just where he did. He mentioned how sorry he was to hear of the passing of Luke 5LL, and also wishes to be remembered to all of the VK5 gang. No mention of when he is returning, but he is coming back via England and the Middle East. Thanks, Joe, letter much appreciated. 73, Bob.

Notice that the VK1 correspondent for the Youths Club radio activity now treats me with ignore since he has discovered Bob 5OD. Can't help but observe the different approach in his writings. Did he ever ask me for some news, and add "if we are friends?" No sir, all he ever did to me was to try and shoot me down in flames! How are you Ken? Are we still buddies?

Did you notice Mr. Wilson (4RW)—we are not on christian names standing yet—trying to put himself in for a "cuppa" with Muriel 2AIA in his notes last month? How cheeky can they get? If there are any "cuppa's" going from that bevy of beauty, Muriel 2AIA, Mona 2AXS, Hebe 2AOK and Verle 2MR, then let me assure all and sundry that my dainty hand will be holding the cup. Won't I girls? Shush-h-h-h, not too loud, they might hear you!

No news lately of that old VK5 veteran Rupe 7RM. Buck 5DA, to say nothing of enquiries from several other sources, was asking after you Rupe. What about a couple of lines some time?

It was good to hear at the meeting, in the new members' list, the names of several of the older ex-members who had decided to renew their subs. This is to the good, after several years' absence from the Divisional scene. Quite a number of old members who have let their subs. go for various reasons would probably join again with a little gentle nudging. Don't let that joining fee bother you. I would hate to hold out a sub. in the general direction of the Treasurer (Harry 5MY). Joining fees or any other such simple by-laws never worry him. His telephone number is 53-2121, and he is not too proud to sign you up.

About a year or so ago, any time that one listened on 7 Mc. during the early afternoons, the University Amateur Radio Club (5UA) and the Prince Alfred Amateur Radio Club (5PZ) seemed to be the only VK5 stations on the air consistently at that time. These days it would be a novelty if either station was heard on at all. Pity in a way, I suppose it is the old story, one or two of the enthusiastic ones move on and the driving force is gone.

Thought the photo of Al 5ZC on the September cover of the magazine was a good one, the fact that it was a VK5 might have biassed me a little. What's that? There is only one S in biased. Pardon me—in my dictionary it shows one S or two S'es, please yourself. Naturally living up to my name of a "padder", I prefer to use the extra letter! However, getting back to my subject, I had a look through some of my best photographs with the idea of sending one to the magazine in the hope of making the front cover. I picked a beauty—one of my best poses—unfortunately my XYL tells me that a picture of me laying on my tummy in an outsize in seashells, with my legs kicking in the air, would not have much appeal. A pity, I had such a ducky blue ribbon around my chubby neck too!!

This month has been a bad month for news of any description. The bands are extra quiet, my espionage agents have all but disappeared and my new working hours make listening almost impossible. However, just as I was going to put these notes to bed, along came "Info," the official journal of the Elizabeth Amateur Radio Club (5LZ) from which, without any compunction whatsoever, I pirate this last page of notes!

Bill 5WV is tinkering with the idea of giving s.s.b. a trial, and is at the moment of writing gathering the bits and pieces together in preparation. Clive 5PE, Bill 5VE and Ted 5ZE have been heard on 80 mx c.w. My shanghaied spy adds, "keeping their hands in, no doubt." Angus 5DE is busy rushing around the donga and is conspicuous by his absence. What is a donga? Do you mean to tell me that you don't know what a donga is? You don't know what a donga is? Well, well, well. How ignorant can one be. Do I know what a donga is? Haw-haw-haw! No I don't!!

John 1QL (ex-5QL) is now domiciled in Canberra and appears quite keen on the club activities over there. Watch out for that Ken 1KM. He thinks all VK5s are like me, John!

Ian 5IK is likely to move to VK3, so the rumour goes. My sympathy is extended to you OM, it is bad enough having them loitering on our border, let alone having to live with them. Keep away from Pincott 3AFJ, he bites!

Ron 5FY is still reported as having almost given the game away and this assertion is being made much too frequent for my peace of mind. What about a statement OM? I am so perturbed at the continuation of the news that I intend to write personally. Watch for an unstamped envelope!

Well, this is it, at last the end. But before I close, I must tell you of one of the safety slogans that my source of income received for a slogan contest they held recently. It was from a Boy Scout, of somewhat tender age. I quote: "Don't smoke in bed—the sleeping bag you burn may be your wife." Sit down my sweetness, not you! 73 de 5PS. PanSy to you.

— . . . —

WESTERN AUSTRALIA

This month we have had one contest, the 80 mx scramble which was quite a success with several country stations taking part. It was a pity however that more did not take part as obviously many were just listening. The swap over to 80 in lieu of 40 was a move in the right direction with propagation being as it is.

Recently two of our members went over to Mount Macedon to attend the Communications Course and their reports were very good. It would appear, however, that the Establishment may not be very sound as one of them

swears that the walls and mirror were moving one night. This could have been caused by something else however.

Activity on the various bands is very patchy, but one can hear quite a number of signals on 80 most evenings. This will probably change however with the approach of summer and its problems for this band. Twenty metres has been coming to life in the evenings of late, with signals coming from Europe and India. American signals have also been coming in quite well.

Any country member who may have an item to be submitted for the agenda at next year's Federal Convention should submit it as early as possible so that it can be processed and ready early. This does not only apply to country members, but also to any members.

Once again this month information has been very scarce and I would very much appreciate anything of interest being passed on to me.

I believe that if anyone would like a demonstration of the cornering ability of a Freeway, they should try Geraldton for a likely place. However, would suggest that you use a different story than the one used by one of the members already.

Bernie 6KJ was travelling up to Perth and was using his Swan mobile and the signal on 80 was excellent. I believe many more Amateurs have or are building up mobile gear and we should hear more mobile signals in the future.

Your Council will be very pleased to receive any suggestions which you may put forward. If you have any complaints we would like to hear these also.

This seems to be all for now, chaps, so till next month, 73, Roy 6RY.

— • • • —

TASMANIA

It is strange how little information a scribe starts out with when writing for this column (this scribe, anyway), but, after a ten-minute QSO via 600 ohms with a certain person who seems to keep his ears open all the time, I think I've just about got enough to make a showing.

Quite a few well known call signs have been heard on the air of late, some of them after quite considerable periods of silence. Bob 7OM is back from VK4 after an absence of about 10 weeks. "Up there to work," so he said, but I notice he picked the winter months to go. Another "long time no hear" signal is from Brian 7BH, who I am told is back on specifically for the Jamboree, but we're hoping he will continue to be heard not infrequently even after the said Jamboree.

Another one is Tiny 7JD whose signal at my QTH is in keeping with his physique—believe he has his shack finished now, so should hear more of him now.

Doug 7AB has moved from New Norfolk to Oatlands in the course of his employment, so some f.b. sigs should be heard from the lower midlands when he gets his antenna farm organised.

Crosby 7CW has not been sighted at the time of writing, but if he is going to schedule he should be home in about a week from now—probably got himself so much new gear they will send him on a special flight.

I've noticed on the round-up after the Sunday broadcast that the broadcast officer often has to ask for a repeat call from some sideband station that haven't quite given him time to switch the product detector in, so what about a little longer call you sidebanders!

After quite a few weeks of trying a sure path has been found by Eddie 7ZBM out of Tarraleah into Hobart on 2 mx, been getting 5 by 8 to 9 reports both ways, good work Eddie. Hope to work you myself soon.

Notice the Northern Zone President (Denny 7DK) has gone s.s.b. Heard him on 3.5 Mc. Don't know as yet whether he is using it on v.h.f. or not. Knowing Denny, I reckon he'll try it this coming season.

Incidentally, it's planned to have quite an auction (American)—as in American tea—at the Hamfest this year. Proceeds for the I.T.U. fund. So start looking out suitable items the other fellow might like to buy, and you're willing to donate! 73, Geoff 7ZAS.

Repairs to Receivers, Transmitters; constructing and testing; xtal conv., any frequency; Q5-ers, R9-ers, and transistorised equipment.

ECCLESTON ELECTRONICS

146a Cotham Rd., Kew, Vic. Ph. 80-3777

Stockists of Radio and Electronic Components for the Amateur Constructor and Hobbyist

First Ring, Write or Call on

WILLIAM **WILLIS** & Co. Pty. Ltd.

428 Elizabeth St., Melb'ne. Ph. 34-6539

SILICON DIODES

Guaranteed, Tax Paid, Post Free.
Highest quality. Absolute Max. Ratings.

P.I.V.	Amp.	One	Ten*	100*
50	0.75	2/6	—	1/6 ea.
100	0.75	—	2/2†	— ,,
200	0.75	—	2/9	— ,,
400§	0.75	—	5/9	5/2 ,,
700	0.75	12/-	9/6	— ,,
900	0.75	15/9	11/10†	— ,,
1100	0.75	19/-	—	— ,,
50	1.0	—	2/-	1/8 ,,
400	1.5	9/9	7/-	— ,,
800	1.5	18/6	15/-	— ,,
50	2‡	—	2/9†	— ,,
30	3‡	—	3/-	— ,,
50§	3‡	6/6	4/9	4/- ,,
50	12‡	20/-	14/-	11/6 ,,
200	20‡	28/6	25/6	22/10,,
400	20‡	32/6	—	— ,,
50	35‡	35/-	31/6	— ,,

* Ten-lot price, ratings can be assorted; 100-lot price, all same rating; 1,000-lot and above, trade enquiries welcome.
† Special price, to clear stock.
‡ Requires heat sink for full rating.
§ Available end of November.

Germanium Diodes: like OA90, 10 for 23/-.

Zener Diodes: Various voltages, 0.5 to 1,000v., ½w. 10/-; 1w. 15/-; 5w. 20/-.

Unsorted Silicon Diodes: (a) 1 amp. epoxy, 50% over 200v., £15 per hundred. (b) 0.75a., top hats, 50% over 50v., £10 per hundred.
Full testing information with each order.

All stock subject to rapid turnover; please specify second choices. These are only our most popular lines. S.A.E. for free Catalogue. Orders filled every Sat.

Electronics Associates

Dept. U, 76 VIEW STREET, HOBART, TASMANIA

HAMADS

Minimum 5/-, for thirty words. Extra words, 2d. each.

Advertisements under this heading will be accepted only from Amateurs and S.w.l's. The Publishers reserve the right to reject any advertising which, in their opinion, is of a commercial nature. **Copy must be received at P.O. Box 36, East Melbourne, C.2, Vic., by 8th of the month and remittance should accompany the advertisement.**

COLLINS KWM1 S.s.b. Transceiver, 14-30 Mc. (see "CQ," 8/62, for 7 Mc. conversion), £250 including 516F a.c. supply, 240/115v. transformer. John Miles, VK1JM, 129 Mugga Way, Red Hill, A.C.T. Phone 9-4632.

DRAKE 2B Rx £200. Central Electronics 20A S.s.b. Tx with V.f.o., £130. Central Electronics Sideband Slicer, Model A (this is an adaptor to connect to existing receiver for sideband reception), £22/10/0. Johnson Match Box Antenna Coupler with S.w.r. Indicator, but no direction coupler, £37/10/0. LM210 Frequency Meter £30. Complete Mobile or Fixed Station Ham Band Rig, Morrow Tx, xtal or v.f.o., 6146 in final, £65. Morrow Rx double conversion, noise limiter, S Meter, Squelch, will resolve sideband, £72/10/0. No power supply for either unit. 6GU 4 el. Tri-band Beam, 10-15-20 metres, complete with boom cradle, £20. T. E. Straughair, 23 Tristania St., East Doncaster, Vic.

FOR SALE: Collins 75S-1 with instruction book and 240v./115v. trans., new appearance and performance, £280. O.N.O. VK5MT, Phone 57-5053.

FOR SALE: Communications Receiver, A.W.A., 200 Kc.-30 Mc., 240v., S Meter, good condition, £25. Phone 93-6464, Cheltenham, Vic.

FOR SALE: Palec V.T.V.M. £15. Palec Valve Circuit Tester £15. Calstan Tube Checker £13. Radiola 7-Band, 9 Valves, £18½. Columbus 5-Band, 6 Valves, £9. Command 6-9 Mc., with p/s., £9. (All Rx suit S.w. Listeners.) 3 Microphones (50 ohm), 30/- each. Audio Osc. (R. & H.), 25 cycle to 30 Kc., £10. H.M.V. Motor and P.U., L/P only, £3. All gear in good condition. H. Roach, 28 Foster Ave., Glenhuntly, Vic.

R.C.A. ET4336 Transmitter, 2 to 20 Mc. 813s, modulated 805s, requires 15 watts audio, rated 350 watts c.d. output, 250 watts a.m. At present slightly modified for AB2 linear operation. Easily restorable. Instruction Book. £30 O.N.O. Phone Brown, Canberra JO 422, Ext. 2380.

WANTED: All Back Numbers of "QST," "CQ," "73," 2/- per copy. Reply in writing to the Advertiser, 383 Warrigal Rd., Burwood, Vic.

WANTED: Command Receiver, 3 to 6 Mc., or 6 to 9 Mc. Alan Lyall, 616 Bell St., Preston, Vic. Phone 44-4315 (home), 60-1199 (business except Wednesday).

WANTED: Service Power Supply for GO9 and 240 P.S. or parts. Output 2,000v. at 200 mA. and 550v. at 200 mA. Also 240v. time delay. Fil. Trans. 15v. sec. 2 a. Watson, Leppit Rd., Pakenham, Vic. (Ph. 463).

WESTINGHOUSE Mobilaire, 1½ h.p. reverse cycle Air Conditioner with chrome trolley, six months' use, £150. Leader LSG11 Signal Generator, latest model in carton, £10. A.W.A. Q50084, 100 Kc. I.F. Amplifier, complete with tubes, ideal s.s.b., £5. 400 ft. nearly new 300 ohm Open Wire T.V. Feeder, £5. German, Italian and French Language Courses on Records, new condition, £10 the lot. 72 ohm Co-ax, Tubes, Stereo and Monaural 12" L.P. Records, etc. Consider part exchange S.s.b. Transceiver. VK6RE, 10 Craddock Rd., Merredin, W.A.

WARBURTON FRANKI

MALLORY MANGANESE ALKALINE BATTERIES

★ Completely leakproof.
★ Two years shelf life.
★ Up to 10 times life of ordinary dry cells.

MN1300	(950)	**6/4 ea.**	+ S.T.	2½%
MN1400	(935)	**5/1**	,,	,,	,,
MN1500	(915)	**3/3**	,,	,,	,,
MN2400	(912)	**2/10**	,,	,,	,,
MN9100	(904)	**2/1**	,,	,,	,,

Also available **Mercury Batteries Type TR146.** Similar in size and shape to 216 and 006-P. Gives 3 times longer life.

9/2 each + S.T. 12½%

PLEASE ADD POSTAGE

TRANSFORMER RECTIFIER SETS

A. & R. Transformer and Matching Contact Cooled Rectifier. **Output**: 250 v.d.c. at 60 mA. Much cheaper than ordinary transformers using valve rectifiers, or silicon diodes. Suitable for instruments, radios, amplifiers, etc.

36/- set + S.T. 12½%

ALSO—

Low Voltage Sets—Transformer and Rectifier to give output of 12-15 volts at 2 amps. Suitable for model trains, transistor radio power supplies, etc.

41/- set + S.T. 12½%

OILERS New Swiss Made Precision Type LUBRISTYL

- Clips in pocket like fountain pen.
- Always clean.
- Leakproof—draws back excess oil.
- Controlled application of oil to any point easily accomplished. Supplied c/w. instructions and two capsules of oil.

13/- S.T. Exempt + Pack & Post 6d.

TERRIFIC BARGAIN IN COIL KITS

Five Bands—Covers from 520 Kc. to 18.5 Mc.

You get—

1. Completely wired Coil Bracket with switch.
2. A pair of ferrite cored i.f. transformers.
3. A two-gang tuning condenser with built-in trimmers.
4. An attractive dial glass 3⅞" x 4⅜"—marked in kilocycles and metres.
5. A full descriptive leaflet with recommended circuitry up to the first i.f. transformer.

Ask for Geloso 2676.

£5/12/6

+ S.T. 25% + Pack & Post 2/6.

PROTECT YOUR PREMISES WITH The SCOTT Electronic Eye

A.C. Mains operated.

Kit consists of Light Source and Eye Unit.

Complete with power supply, amplifier, buzzer, hardware and connecting wires.

Use across doorways or other openings up to 25 feet wide.

£16/13/4

plus 12½% Sales Tax and Postage for weight of 4 lbs.

SILICON DIODES

400 P.I.V. at 1 amp.
Made in U.S.A.

6/3 each + S.T. 25% or
70/- doz. + S.T.

SPECIAL OFFER—

Lots of 50

£13/10/0 + S.T.

TRANSISTOR AMPLIFIERS

Two Watts Output

Encapsulated in epoxy resin, works from 4½ to 12 volts supply. Output impedance: 3 to 45 ohms. Supplied c/w. leaflet of instructions to build various pieces of equipment.

120/-

+ 25% S.T. + Pack & Post 1/3.

WARBURTON FRANKI

220 PARK ST. SOUTH MELB., VIC. PHONE 30 lines **69-0151**

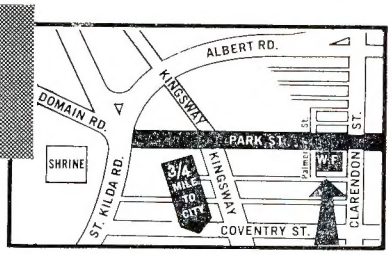

★ *TRADE ALSO SUPPLIED*

● *Please include postage and freight with all orders*

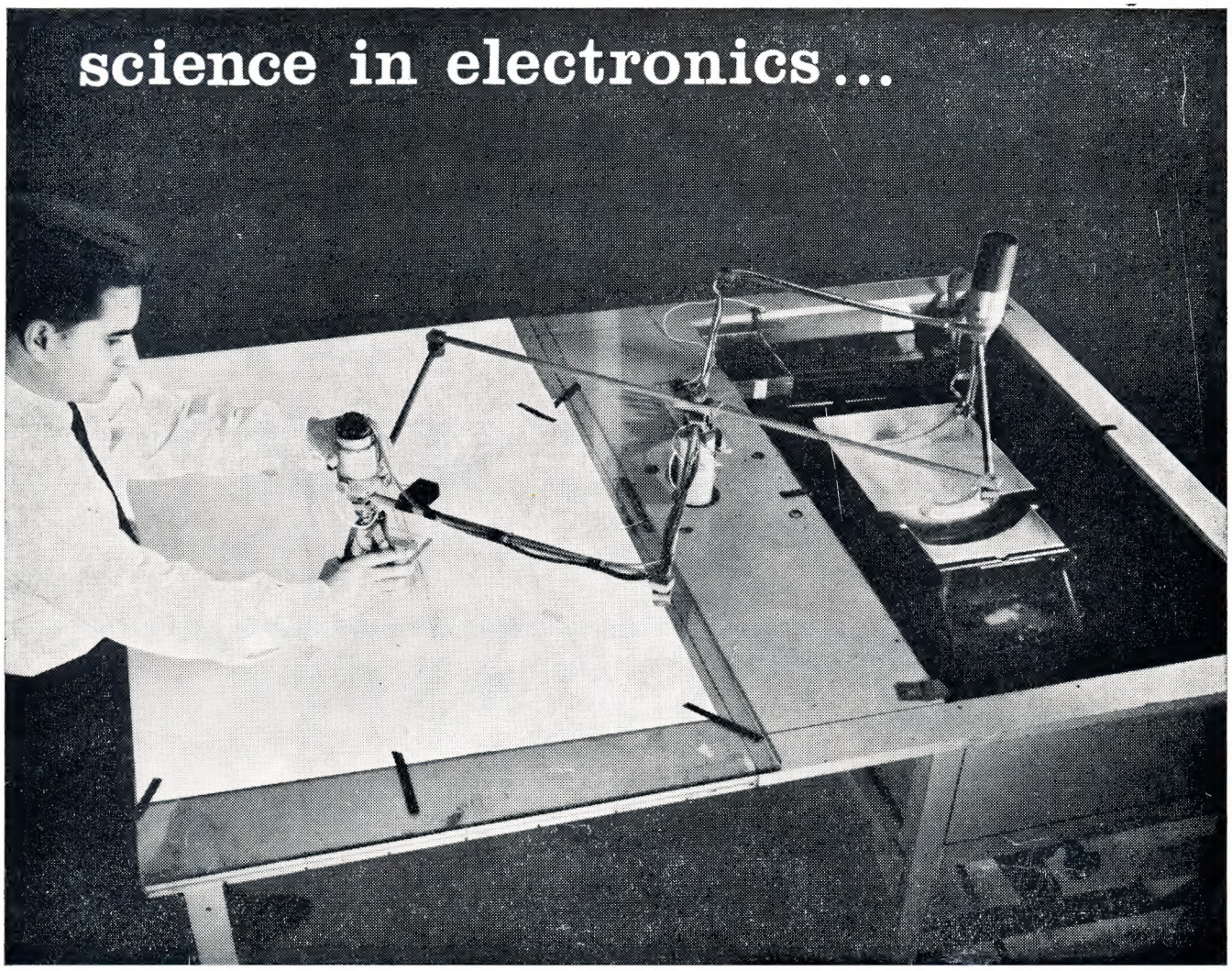

AN ELECTROLYTIC TANK ANALOGUE AT AWV SYDNEY.

DESIGNING AN ELECTRON GUN

The engineer in the picture is using a machine called an "electrolytic tank analogue" to trace electrostatic field lines within a television tube electron gun. It is not a normal life-size gun of course, but a large model of a gun that has been cut in half so that a probe can be used inside it.

It is a fascinating illustration of the unity of science that this strange mechanical animal can bring to graphical reality the century-old theoretical dreams of Faraday and Clark-Maxwell—it can actually draw the electrical field.

As a matter of fact, it can do more than this—it can trace out the paths taken by electrons flying through the gun on their way to spell out a picture on the screen of a television set. Again, is it not strange that such a device can keep up with the antics of the infinitely smaller electron, millions of millions of millions times lighter than it? (The mass of the electron is about 10^{-30} Kgm.) The laws of Science hold over vast magnitudes.

Our scientists and engineers sometimes pause to muse on these matters, while they are pursuing their constant task of applying science to the solution of problems which arise in the design and manufacture of the world's best valves and picture tubes.

AMALGAMATED WIRELESS VALVE CO. PTY. LTD. • SYDNEY • MELBOURNE • ADELAIDE • BRISBANE